MDS-SE9

SERVICE MANUAL

UK Model

Ver 1.0 2004.02

Self Diagnosis
Supported model

MDS-SE9 is MD deck and Tape deck section in CMT-SE9.

MD Section	Model Name Using Similar Mechanism	HCD-CP505
	MD Mechanism Type	MDM-7S2D
	Optical Pick-up Type	KMS-262E
Tape deck Section	Model Name Using Similar Mechanism	NEW
	Tape Transport Mechanism Type	CMAL2Z8

SPECIFICATIONS

MD deck section

System	Minidisc digital audio system
Laser	Semiconductor laser (λ=780 nm) Emission duration: continuous
Sampling frequency	44.1 kHz
Frequency response	5 Hz – 20 kHz

Tape deck section

Recording system	4-track 2-channel stereo
Frequency response	50 – 13,000 Hz, using Sony TYPE I cassettes

General

Power requirements	230 V AC, 50/60 Hz
Power consumption	13 W
Dimensions(w/h/d)	Approx. 155 × 120 × 345 mm
Mass	Approx. 4.0 kg

Design and specifications are subject to change without notice.

MD/TAPE DECK

9-961-479-01
2004B1678-1
© 2004.02

Sony Corporation
Home Audio Company
Published by Sony Engineering Corporation

SONY®

NOTES ON HANDLING THE OPTICAL PICK-UP BLOCK OR BASE UNIT

The laser diode in the optical pick-up block may suffer electrostatic break-down because of the potential difference generated by the charged electrostatic load, etc. on clothing and the human body.
During repair, pay attention to electrostatic break-down and also use the procedure in the printed matter which is included in the repair parts.
The flexible board is easily damaged and should be handled with care.

CLASS 1 LASER PRODUCT
LUOKAN 1 LASERLAITE
KLASS 1 LASERAPPARAT

This appliance is classified as a CLASS 1 LASER product. This label is located on the rear exterior.

FOR MD

NOTES ON LASER DIODE EMISSION CHECK

Never look into the laser diode emission from right above when checking it for adjustment. It is feared that you will lose your sight.

Laser component in this product is capable of emitting radiation exceeding the limit for Class 1.

Flexible Circuit Board Repairing

- Keep the temperature of the soldering iron around 270 ˚C during repairing.
- Do not touch the soldering iron on the same conductor of the circuit board (within 3 times).
- Be careful not to apply force on the conductor when soldering or unsoldering.

SAFETY-RELATED COMPONENT WARNING!!

COMPONENTS IDENTIFIED BY MARK ⚠ OR DOTTED LINE WITH MARK ⚠ ON THE SCHEMATIC DIAGRAMS AND IN THE PARTS LIST ARE CRITICAL TO SAFE OPERATION. REPLACE THESE COMPONENTS WITH SONY PARTS WHOSE PART NUMBERS APPEAR AS SHOWN IN THIS MANUAL OR IN SUPPLEMENTS PUBLISHED BY SONY.

Notes on chip component replacement

- Never reuse a disconnected chip component.
- Notice that the minus side of a tantalum capacitor may be damaged by heat.

Unleaded solder

Boards requiring use of unleaded solder are printed with the lead-free mark (LF) indicating the solder contains no lead.
(Caution: Some printed circuit boards may not come printed with the lead free mark due to their particular size.)

: LEAD FREE MARK

Unleaded solder has the following characteristics.

- Unleaded solder melts at a temperature about 40°C higher than ordinary solder.
  Ordinary soldering irons can be used but the iron tip has to be applied to the solder joint for a slightly longer time.
  Soldering irons using a temperature regulator should be set to about 350°C.
  Caution: The printed pattern (copper foil) may peel away if the heated tip is applied for too long, so be careful!
- Strong viscosity
  Unleaded solder is more viscous (sticky, less prone to flow) than ordinary solder so use caution not to let solder bridges occur such as on IC pins, etc.
- Usable with ordinary solder
  It is best to use only unleaded solder but unleaded solder may also be added to ordinary solder.

Note 1: MDS-SE9 does not operate independently. HCD-SE9 is required to operate this.
In this case of a service, please connect HCD-SE9.
Note 2: Incorrect operations may be performed if the test mode is not entered properly.
In this case, press the I/⏻ button to turn the power off, and retry to enter the test mode.

TABLE OF CONTENTS

1. SERVICING NOTES 10

2. GENERAL 13

3. DISASSEMBLY 15
- 3-1. Top Cover 16
- 3-2. Front Panel Section 16
- 3-3. PANEL Board 17
- 3-4. Power Transformer 17
- 3-5. MD DIGITAL Board 18
- 3-6. MD Mechanism Deck (MDM-7S2D) 18
- 3-7. Holder Assy 19
- 3-8. BD Board 19
- 3-9. Loarding Motor, Spindle Motor, Sled Motor 20
- 3-10. Over Write Head (HR901) 20
- 3-11. Optical Pick-up (KMS-262E) 21
- 3-12. Bracket (MDM) 21
- 3-13. MAIN Board 22
- 3-14. POWER Board 22
- 3-15. Tape Mechanism Deck 23

4. TEST MODE 24

5. MECHANICAL ADJUSTMENTS 28

6. ELECTRICAL ADJUSTMENTS
- TAPE SECTION 28
- MD SECTION 30

7. DIAGRAMS 41
- 7-1. Block Diagrams
  - – Main Section – 42
  - – MD Section – 43
  - – USB Section – 44
- 7-2. Printed Wiring Board – BD Board – 45
- 7-3. Schematic Diagram – BD Board (1/2) – 46
- 7-4. Schematic Diagram – BD Board (2/2) – 47
- 7-5. Printed Wiring Board – MAIN Board (Side A) – 48
- 7-6. Printed Wiring Board – MAIN Board (Side B) – 49
- 7-7. Schematic Diagram – MAIN Board (1/2) – 50
- 7-8. Schematic Diagram – MAIN Board (2/2) – 51
- 7-9. Printed Wiring Board – MD DIGITAL Board – 52
- 7-10. Schematic Diagram – MD DIGITAL Board – 53
- 7-11. Printed Wiring Board – PANEL Board – 54
- 7-12. Schematic Diagram – PANEL Board – 55
- 7-13. Printed Wiring Board – POWER Board – 56
- 7-14. Schematic Diagram – POWER Board – 57
- 7-15. IC Pin Function Description 61

8. EXPLODED VIEWS
- 8-1. Overall Section 64
- 8-2. Front Panel Section 65
- 8-3. Chassis Section 66
- 8-4. MD Mechanism Deck Section-1 (MDM-7S2D) 67
- 8-5. MD Mechanism Deck Section-2 (MDM-7S2D) 68

9. ELECTRICAL PARTS LIST 69

Self-diagnosis display

This system has a Self-diagnosis display function to let you know if there is a system malfunction. The display shows a code made up of three or five letters and a message alternately to show you the problem. To solve the problem refer to the following list. If any problem persists, consult your nearest Sony dealer.

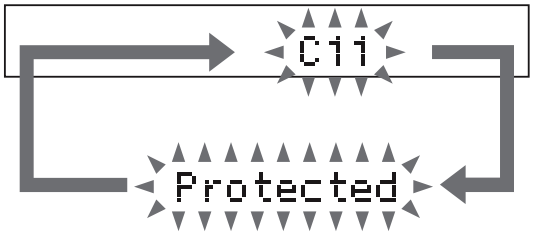

C11/Protected

The MD is protected against erasure.

➔Remove the MD and slide the tab to close the slot.

C12/Cannot Copy

You tried to record a disc with a format that the system does not support, such as a CD-ROM.

➔Remove the disc and turn off the system once, then turn it on again.

You tried to record sound that cannot be digitally recorded with this system from a connected optional component.

➔Switch the digital audio output of the optional component to PCM mode.

C13/REC Error

Recording could not be performed properly.

➔Move the system to a stable place, and start recording over from the beginning.

The MD is dirty or scratched, or the MD does not meet the standards.

➔Replace the MD and start recording over from the beginning.

C13/Read Error

The MD deck cannot read the disc information properly.

➔Remove the MD once, then insert it again.

C14/TOC Error

The MD deck cannot read the disc information properly.

➔Replace the MD.

➔Erase all the recorded contents of the MD using the All Erase Function.

C41/Cannot Copy

The sound source is a copy of a commercially available music software or CD-R.

➔The Serial Copy Management System prevents making a digital copy. In addition, you cannot copy from a CD-R.

C71/Check OPT-IN

The digital optical cable is disconnected, or the power of the connected component is turned off while recording the digital audio from an optional component connected to the VIDEO/SAT DIGITAL IN OPTICAL jack or a CD.

➔Connect the digital optical cable, or turn on the power of the connected component.

The DVD player and the MD deck are not connected correctly with the digital optical cable, or you tried to start the recording immediately after setting the recording pause mode when making a digital recording from a optional component connected to the VIDEO/SAT DIGITAL IN OPTICAL jack or a CD.

➔Connect the digital optical cable correctly, or wait for several seconds in the recording pause mode before starting the recording.

E0001/MEMORY NG

The component has internal problem.

➔Consult your nearest Sony dealer.

E0101/LASER NG

There is a problem with the laser pickup.

➔The laser pickup may be damaged. Consult your nearest Sony dealer.

E0201/LOADING NG

There is a problem with loading.

➔Consult your nearest Sony dealer.

Messages

One of the following messages may appear or flash in the display during operation.

MD

Analog REC
The MD deck starts the analog recording.

Assign None
All the tracks on an MD are registered into groups.

Auto Cut
The MD deck is pausing the recording because silence continued for 30 seconds or more during digital recording.

Blank Disc
The inserted recordable MD is new, or all tracks on the MD have been erased.

Cannot Edit
- A pre-mastered MD is in the deck.
- You tried to edit in Program or Shuffle Play mode.
- The track is recorded in MDLP mode.

Cannot REC
- A pre-mastered MD is in the deck.
- The function is switched to MD.

Cannot SYNC!
- There is no disc in the MD deck, or the MD is protected against erasure.
- There is no time remaining on the MD.

Complete!
The editing operation of the MD is completed.

Disc Full!
There is no time remaining on the MD.

Eject
The MD deck is ejecting the MD.

Group Full!
An attempt was made to create a new group in excess of the maximum number of groups, or there are insufficient characters for updating the group management information.

Impossible
- You tried to make an impossible editing operation.
- You cannot perform Net MD operations during timer playback.
- You cannot combine or erase the tracks due to the system limitations of MDs.

Incomplete!
Adjustment of the recording level after recording or Fade-in and Fade-out procedures have failed since the system was either subject to vibration or there is a damaged or dirty disc in the tray.

Initialize
The power was off for a long time, so the system is initializing itself.

Name Full!
There is no more space to store track, disc or group titles.

No Change
While attempting to change the recording level after recording, you pressed ENTER without actually changing the recording level, so no change was made.

No Disc
There is no disc in the MD deck.

OVER
You have reached the end of the MD while pressing ►► during pause mode.

Push STOP!
You pressed an invalid button during playback, pause, recording or recording pause.

Reading
The MD deck is reading the TOC information of the MD.

—Rehearsal—
The MD is playing the specified point for confirmation during the A-B Erase Function and the Divide Function.

S.F Edit!
You attempted to perform another operation while in S.F Edit (changing the recording level after recording, Fade-in, Fade-out) mode.

S.F Edit NOW
You pressed I/⏻ while in S.F Edit (changing the recording level after recording, Fade-in, Fade-out) mode.

Smart Space
The signal was input again after silence continued for 3 or more but less than 30 seconds during digital recording, and the silence was cut to 3 seconds.

Step Full!
You tried to program 26 or more tracks (steps).

TOC Writing
The MD deck is writing the information of recorded or edited contents.

Track End

You have reached the end of the track while adjusting the dividing point during the Divide Function.

Tr Protected

Tracks and other data that have been checked out on Net MD equipment are protected, so you cannot use some of the MD editing functions.

Tape

Cannot SYNC!

There is no tape in the tape deck, or the tab has been removed from the cassette.

Eject

The tape deck is ejecting the cassette.

No Tab

You cannot record the tape because the tab has been removed from the cassette.

No Tape

There is no tape in the tape deck.

Note 1: MDS-SE9 does not operate independently. HCD-SE9 is required to operate this.
In this case of a service, please connect HCD-SE9.
Note 2: Incorrect operations may be performed if the test mode is not entered properly.
In this case, press the [I/⏻] button to turn the power off, and retry to enter the test mode.

How to Operate the Self-diagnostics Function (Error History Display Mode)

Note: Use the self-diagnostics function in the "error history display mode" of the test mode. The least required procedure is described below. Do not enter any other modes by mistake. If you have entered any other modes accidentally, press the [MODE] button to exit the mode.

1. Press the [I/⏻] button to turn on the power.
2. Press the [FUNCTION] button to select the “MD” function. (HCD-SE9)
3. While pressing the [MD ■] stick and the [REC MODE] button at the same time, press the [⏏ MD] button.
4. Press the [MD ▶▶I] stick to display “[Service]”. Then press the [ENTER/START] button.
5. Press the [MD ▶▶I] stick to display “Err Display”.
6. Press the [ENTER/START] button to enter the error history display mode and “op rec tm” appears.
7. Select the desired contents that you want to display or to execute using the [MD I◀◀] stick or the [MD ▶▶I] stick.
8. Press the [TAPE REC] button to display or to execute the selected contents.
9. Press the [TAPE REC] button again to return to step 7.
10. Press the [MODE] button. The message “Err Display” appears and you exit the error history mode.
11. Press the [⏏ TAPE] button to exit the test mode.
12. Press the [I/⏻] button to turn off the power. (HCD-SE9)

Items of Error History Mode Items and Contents

Display	History
op rec tm	Displays the accumulated recording time. When the accumulated recording time is more than 1 minute, displays the hour and minute When less than 1 minute, displays “Under 1 min” The display time indicates the time when the laser is set to high power more, which is about 1/4 of the actual recording time.
op play tm	Displays the accumulated playback time. When the accumulated playback time is more than 1 minute, displays the hour and minute When less than 1 minute, displays “Under 1 min”
spdl rp tm	Displays the accumulated rotating time of the spindle motor. When the accumulated rotating time is more than 1 minute, displays the hour and minute When less than 1 minute, displays “Under 1 min”
retry err	Displays the accumulated number of retry errors during recording and playback. Displays “r □□ p □□”. □□ after “r” is the number of errors during recording. □□ after “p” is the number of errors during playback. This is displayed in hexadecimal from 00 to FF.
total err	Displays the total number of errors. Displays “total □□”. This is displayed in hexadecimal from 00 to FF.
err history	Displays the past ten errors. Displays “0X ErrCd@@”. X is the history number. The younger the number, the more recent is the history (00 is the latest). @@ is the error code. Select the error history number by pressing the MD ⏮ or MD ⏭ Stick.
retry adrs	Displays the past five retry addresses. Displays “□□ ADRS □□□□”, □□ is the history number, □□□□ is the cluster with the retry error. Select the error history number by pressing the MD ⏮ or MD ⏭ Stick.
er refresh	Mode for erasing the error and retry address histories. Procedure 1. Press the TAPE REC button when displayed as “er refresh”. 2. When the display changes to “er refresh?”, press the ENTER/START button When “Complete!!” is displayed, it means erasure has completed. Be sure to check the following after executing this mode. *Data has been erased. *Perform recording and playback, and check that the mechanism is normal.
tm refresh	Mode for erasing the accumulated recording time and accumulated playing time. Procedure 1. Press the TAPE REC button when displayed as “tm refresh”. 2. When the display changes to “tm refresh?”, press the ENTER/START button. When “Complete!” is displayed, it means erasure has completed.
op change	Mode for erasing the accumulated time of op rec tm, op play tm. Use these histories as a guide line for the time of replacement of the optical pick-up. If the optical pick-up has been replaced, perform this procedure and erase the past history. Procedure 1. Press the TAPE REC button when displayed as “op change”. 2. When the display changes to “op change?”, press the ENTER/START button. When “Complete!” is displayed, it means erasure has completed.
spdl change	Mode for erasing the accumulated spdl rp tm time. Use these histories as the guide line for the time of replacement of the spindle motor. If the spindle motor has been replaced, perform this procedure and erase the past history. Procedure 1. Press the TAPE REC button when displayed as “spdl change” 2. When the display changes to “spdl change?”, press the ENTER/START button. When “Complete!” is displayed, it means erasure has completed.

Table of Error Codes

Error Code	Description
10	Could not perform loading
11	The changer error occurred
12	Loading switches combined incorrectly
20	Timed out without reading the top of PTOC
21	Could read top of PTOC, but detected error
22	Timed out without accessing UTOC
23	Timed out without reading UTOC
24	Error in UTOC
30	Could not start playback
31	Error in sector
40	A cause of retry occurred during normal recording
41	Retried due to DRAM overflow
42	Retry occurred during TOC writing
43	Retry aborted during S.F editing
50	Other than access processing, and could not read address.
51	Focus NG occurred and overran.
60	High speed synchronize recording of unlock retry.

SECTION 1
SERVICING NOTE

Service Position (Checking TC)

Disassemble the MD mechanism deck and the MD DIGITAL board. Connect the wire (flat type, 25 cores) as shown in the figure to check the tape mechanism.

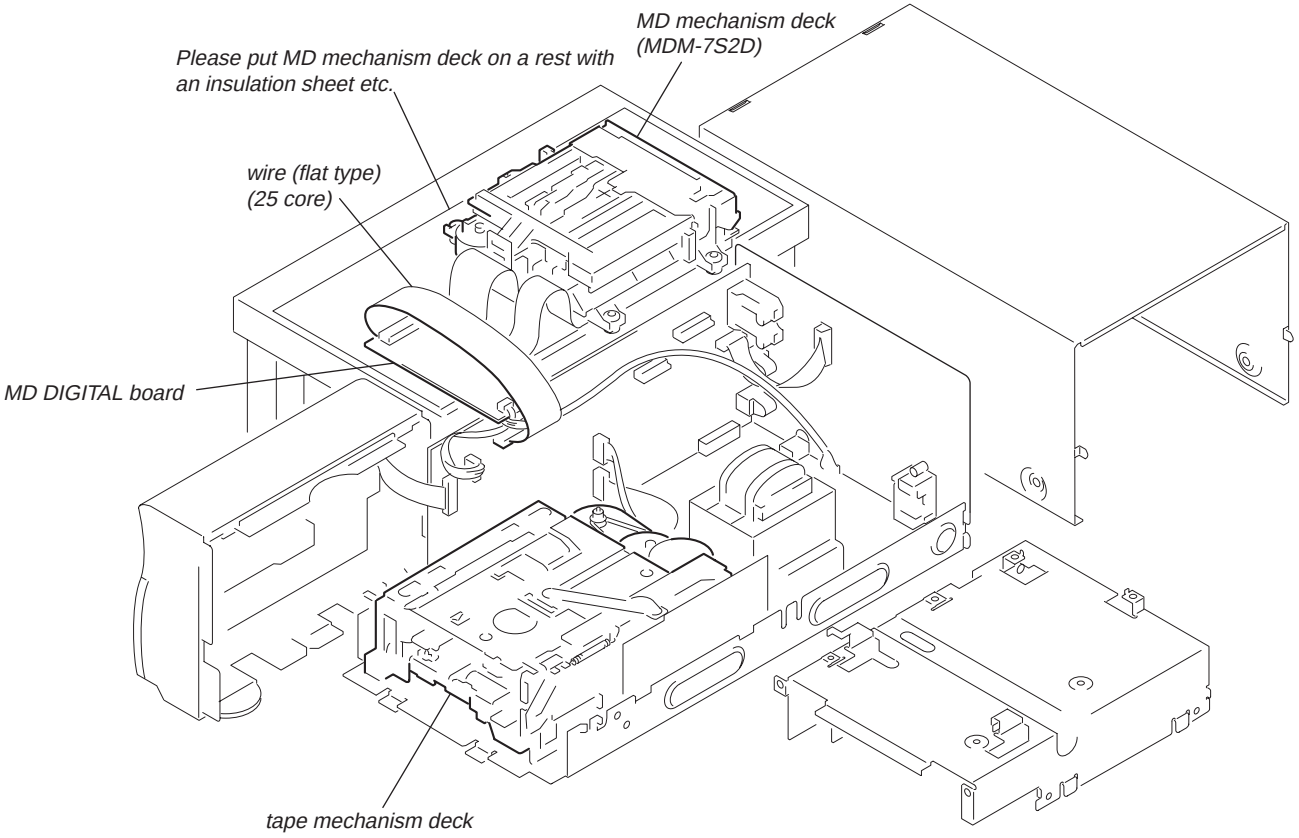

Jig For Checking BD Board Waveform

The special jig (J-2501-196-A) is useful for checking the waveform of the BD board. The names of terminals and the checking items to be performed are shown as follows.

I+3V : For measuring Iop (Check the deterioration of the optical pick-up laser)
Iop : For measuring Iop (Check the deterioration of the optical pick-up laser)
GND : Ground
TE : TRK error signal (Traverse adjustment)
FE : Focus error signal
VC : Reference level for checking the signal
RF : RF signal (Check jitter)

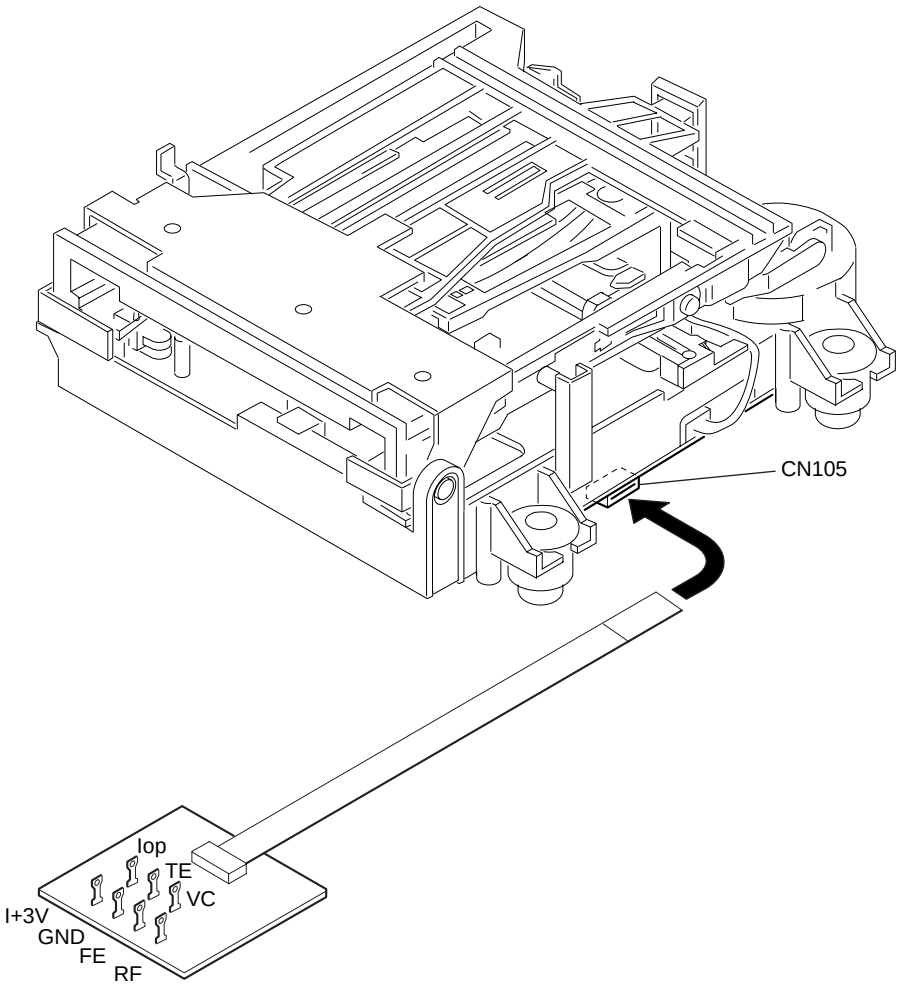

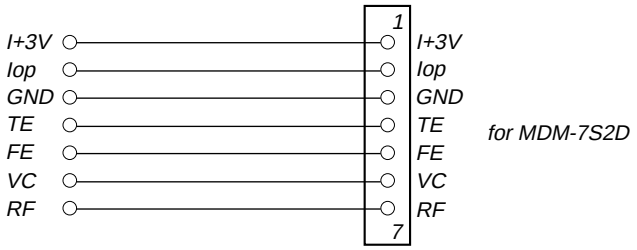

Iop DATA RECORDING AND DISPLAY WHEN OPTICAL PICK-UP AND NON-VOLATILE MEMORY (IC195 OF BD BOARD) ARE REPLACED

The Iop value labeled on the optical pick-up can be stored in the non-volatile memory. By storing the value, it will eliminate the need to look at the value on the label of the optical pick-up. When replacing the optical pick-up or non-volatile memory (IC195 of BD board), store the Iop value on the optical pick-up according to the following procedure.

Record Precedure:

1. Press the [I/⏻] button to turn on the power. (HCD-SE9)
2. Press the [FUNCTION] button to select the "MD" function. (HCD-SE9)
3. While pressing the [MD ■] stick and the [REC MODE] button at the same time, press the [⏏ MD] button.
4. Press the [MD ▶▶I] stick to display "[Service]". Then press the [ENTER/START] button.
5. Press the [MD ▶▶I] stick to display "Iop Write" (C05) and press the [ENTER/START] button.
6. The display becomes "Ref=@@@.@" (@ is an arbitrary number) and the numbers which can be changed will blink.
7. Input the Iop value written on the optical pick-up.
   To select the number : Press the [MD I◀◀] stick or the [MD ▶▶I] stick.
   To select the digit : Press the [TAPE REC] button.
8. When the [ENTER/START] button is pressed, the display becomes "Measu=@@@.@" (@ is an arbitrary number).
9. As the adjustment results are stored for the 8 value. Leave it as it is and press the [ENTER/START] button.
10. "Complete!" will be displayed momentarily. The value will be stored in the non-volatile memory and the display will become "Iop Write" (C05).
11. Press the [⏏ TAPE] button to exit the mode.
12. Press the [I/⏻] button to turn off the power. (HCD-SE9)

Display Precedure:

1. Press the [I/⏻] button to turn on the power. (HCD-SE9)
2. Press the [FUNCTION] button to select the "MD" function. (HCD-SE9)
3. While pressing the [MD ■] stick and the [REC MODE] button at the same time, press the [⏏ MD] button.
4. Press the [MD ▶▶I] stick to display "[Service]". Then press the [ENTER/START] button.
5. Press the [MD ▶▶I] stick to display "Iop Read" (C26) and press the [ENTER/START] button.
6. "@@.@/##.#" is displayed and the recorded contents are displayed.
   @@.@ : indicates the Iop value labeled on the optical pick-up
   ##.# : indicates the Iop value after adjustment
7. To end, press the [MODE] button to display "Iop Read" (C26). Then press the [⏏ TAPE] button.
8. Press the [I/⏻] button to turn off the power. (HCD-SE9)

Checks Prior to Parts Replacement and Adjustments in MD

Before performing repairs, perform the following checks to determine the faulty locations up to a certain extent.
Details of the procedures are described in "SECTION 6 ELECTRICAL ADJUSTMENTS".

	Criteria for Determination (Unsatisfactory if specified value is not satisfied)	Measure if unsatisfactory
Laser power check (6-2 : See page 33)	• 0.93 mW power Specified value : 0.84 to 0.92 mW (KMS-262A) 0.90 to 0.96 mW (KMS-262E) • 8.65 mW power Specified value : 8.1 to 8.7 mW (KMS-262A) 8.4 to 8.9 mW (KMS-262E)	• Clean the optical pick-up • Adjust again • Replace the optical pick-up
	• Iop (at 8.65 mW) Labeled on the optical pick-up Iop value ± 10mA	• Replace the optical pick-up
Auto check (6-4 : See page 34)	• Unsatisfactory if displayed as "NG : XXXX" (XXXX are arbitrary numbers)	• Replace the optical pick-up
Temperature compensation offset check (6-1 : See page 33)	• Unsatisfactory if displayed as "T=@@ (##) [NG]" (@@, ## are both arbitrary numbers)	• Check for disconnection of the circuits around D101 (BD board) • Check the signals around IC101, IC151, CN102, CN103 (BD board)

Note:
The criteria for determination above is intended merely to determine if satisfactory or not, and does not serve as the specified value for adjustments.
When performing adjustments, use the specified values for adjustments.

SECTION 2
GENERAL

This section is extracted from instruction manual.

Main unit

ALPHABETICAL ORDER

A – M

DIRECTION 8
DISPLAY 3
Display window 1
ENTER/START 9
MD lever 4
MD slot 5
MODE 9

N – Z

NET MD 2
REC 8
REC MODE 7
REC/REC IT 7
TAPE lever 6
TAPE slot 11

BUTTON DESCRIPTIONS

■ (stop) 4 6
⏮/⏭ (go back/go forward) 4
►II (play/pause) 4
⏏ MD (eject) 12
⏏ TAPE (eject) 10
II (pause) 8
◄► (play) 6
◄◄/►► (rewind/fast forward) 6

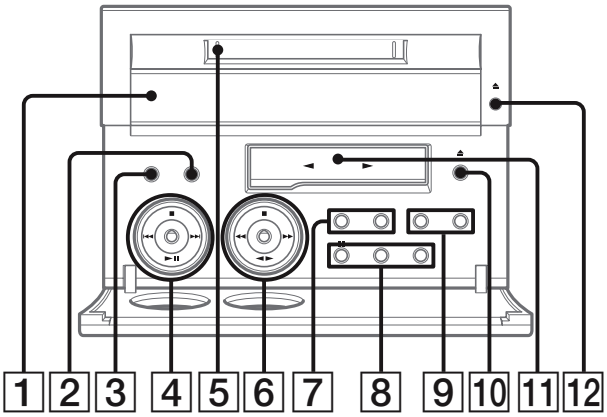

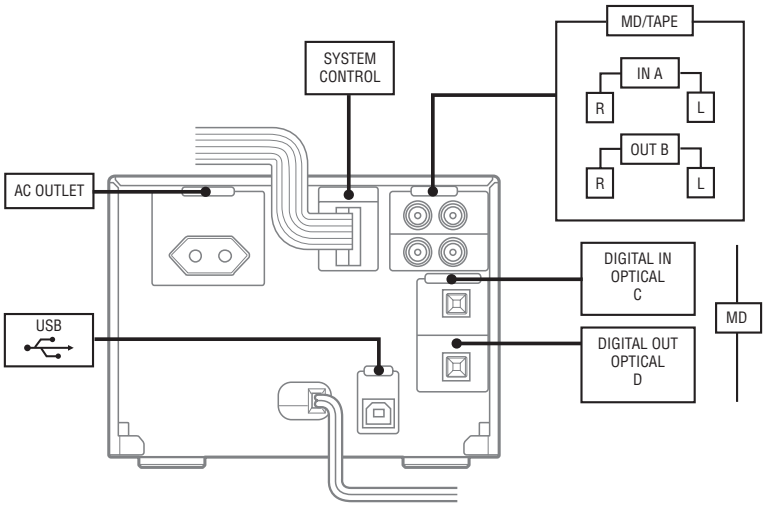

Remote control

ALPHABETICAL ORDER

A – F

ALBUM +/–* 13
ANGLE* 8
AUDIO* 8
CLEAR 20
CLOCK/TIMER SELECT 12
CLOCK/TIMER SET 12
DDSG 14
DVD DISPLAY* 9
DVD MENU* 13
DVD SETUP* 24
ENTER 16
FM MODE 22
FUNCTION 19

G – Z

GROUP SKIP 7
MD GROUP 7
MENU/NO 4
NAME EDIT/SELECT 10
Number buttons 3
PC LIB 21
PLAY MODE 18
REPEAT 22
SCROLL 23
SLEEP 2
SOUND FIELD +/– 6
SPEAKER OUT MODE 17
SUBTITLE* 8
TOP MENU* 13
TUNER BAND 15
TUNING MODE 18
VOLUME +/– 11

BUTTON DESCRIPTIONS

I/⏻ (power) 1
MD ► (play) 5
PC ► (play) 5
SA-CD/DVD ►/SELECT (play) 5
TAPE ◄► (play) 5
+/– 16
❚❚ (pause) 16
■ (stop) 16
▲/▼/◄/► 16
◄◄/►► (rewind/fast forward) 16
❙◄◄/►►❙ (go back/go forward) 16
◄❙/❙► (slow review/slow play) 16
RETURN ↶* 25

* Please operate with the cover closed.

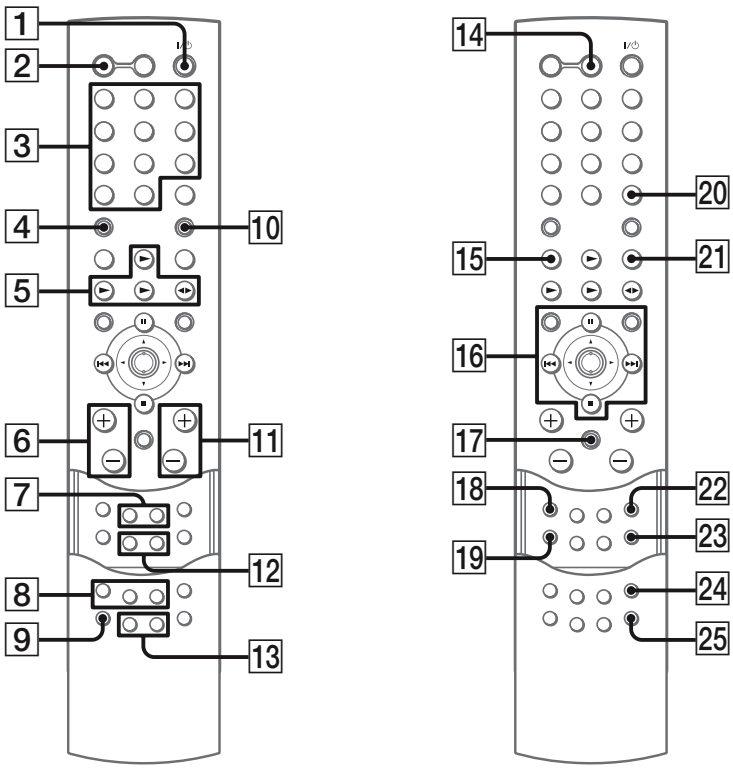

SECTION 3
DISASSEMBLY

• The equipment can be removed using the following procedure.
• The dotted square with arrow (⊡→) prompts you to move to the next job when all of the works within the dotted square (⊡) are completed.

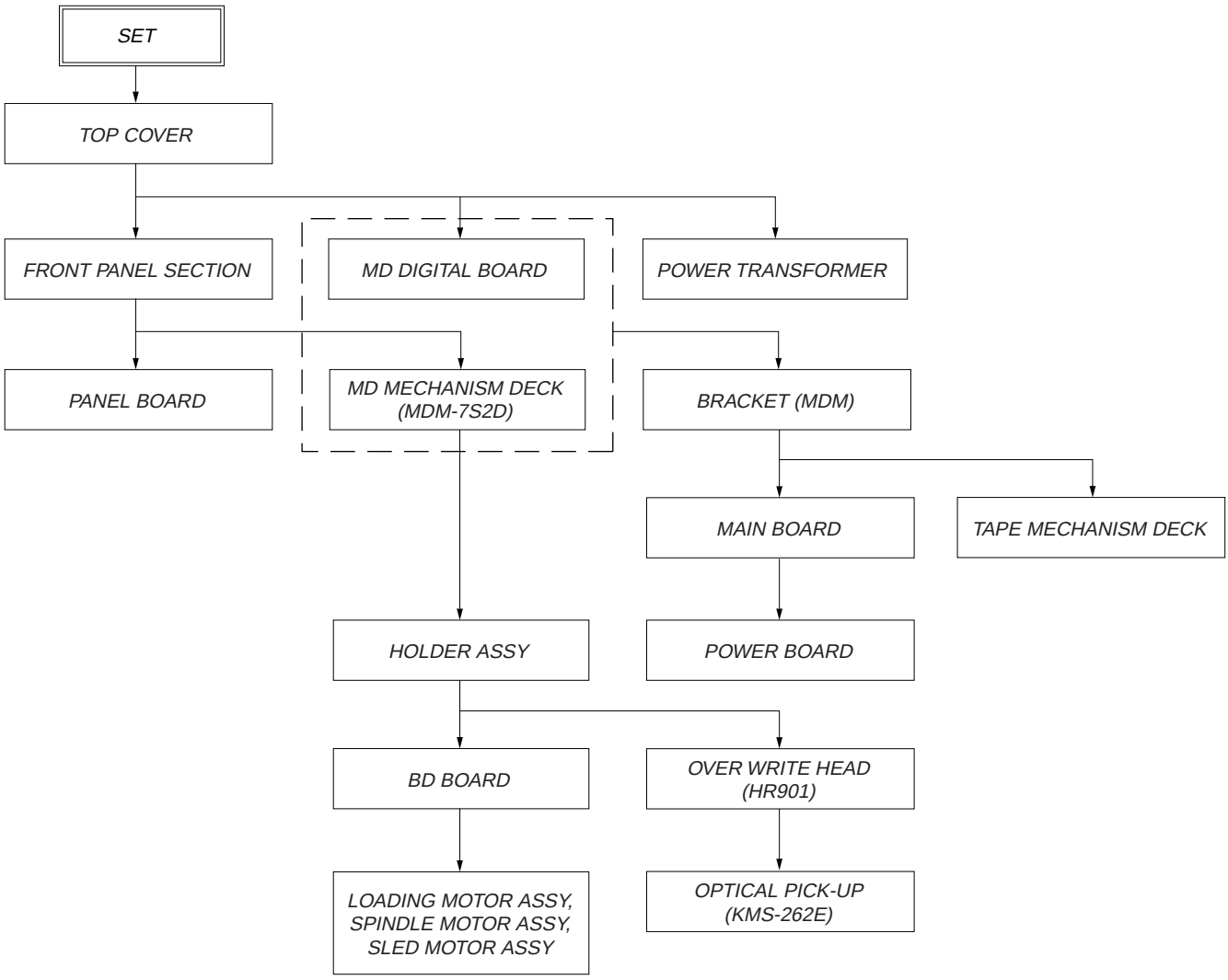

Note: Follow the disassembly procedure in the numerical order given.

3-1. TOP COVER

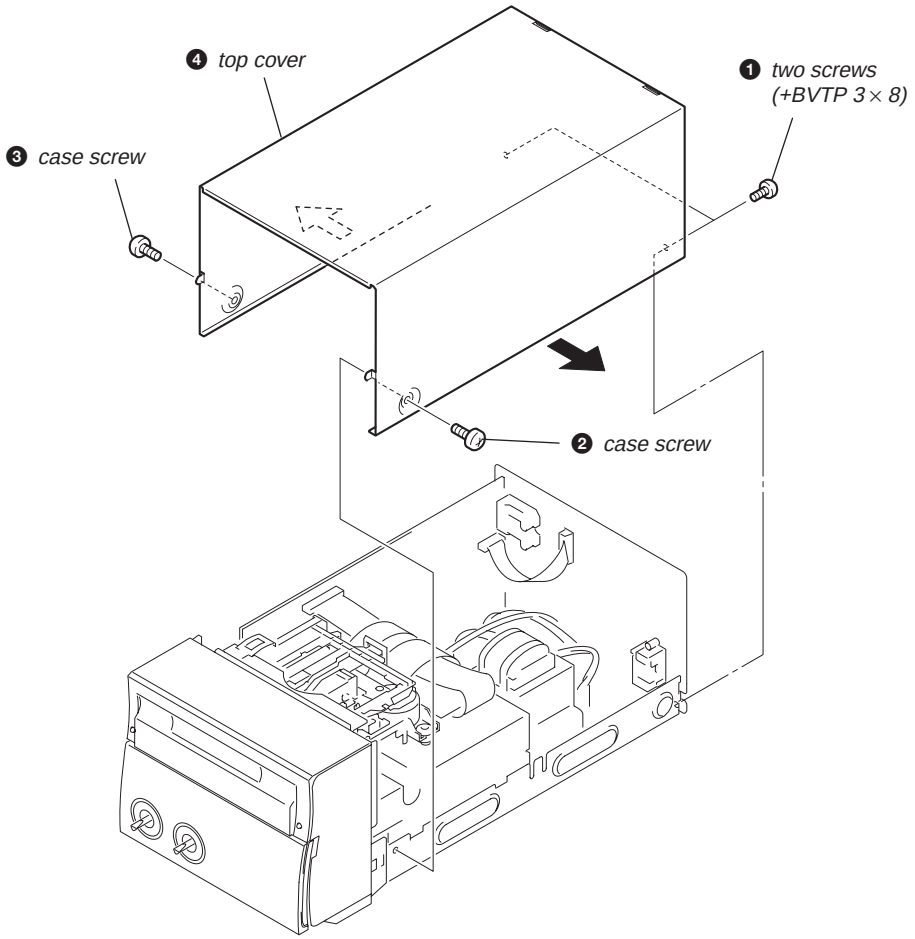

3-2. FRONT PANEL SECTION

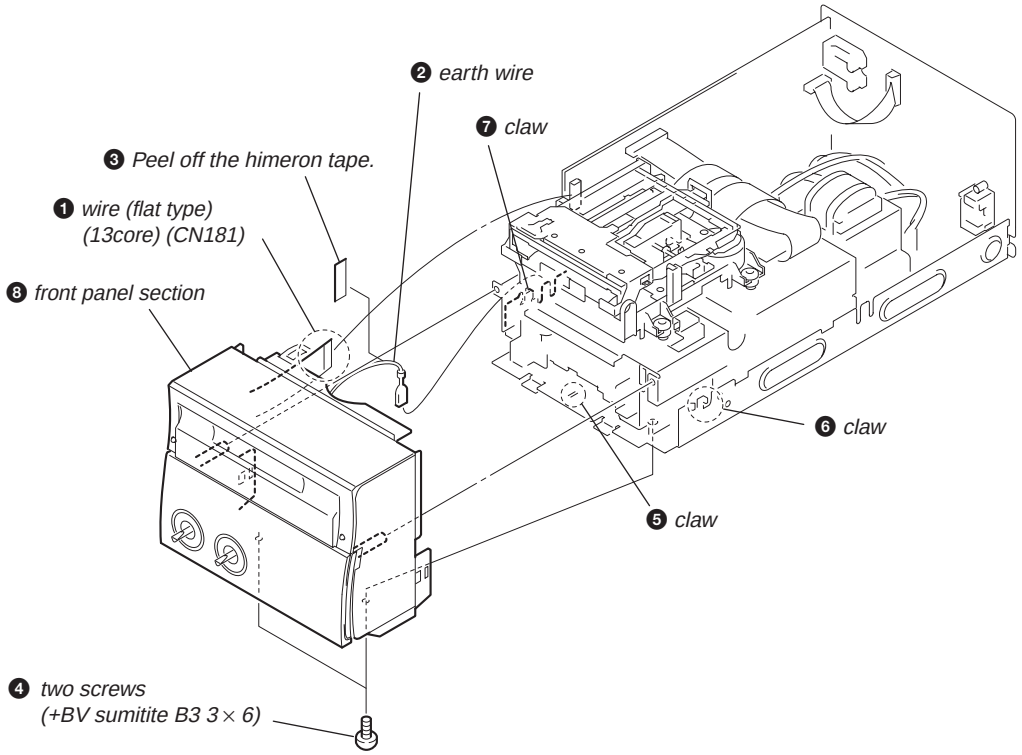

3-3. PANEL BOARD

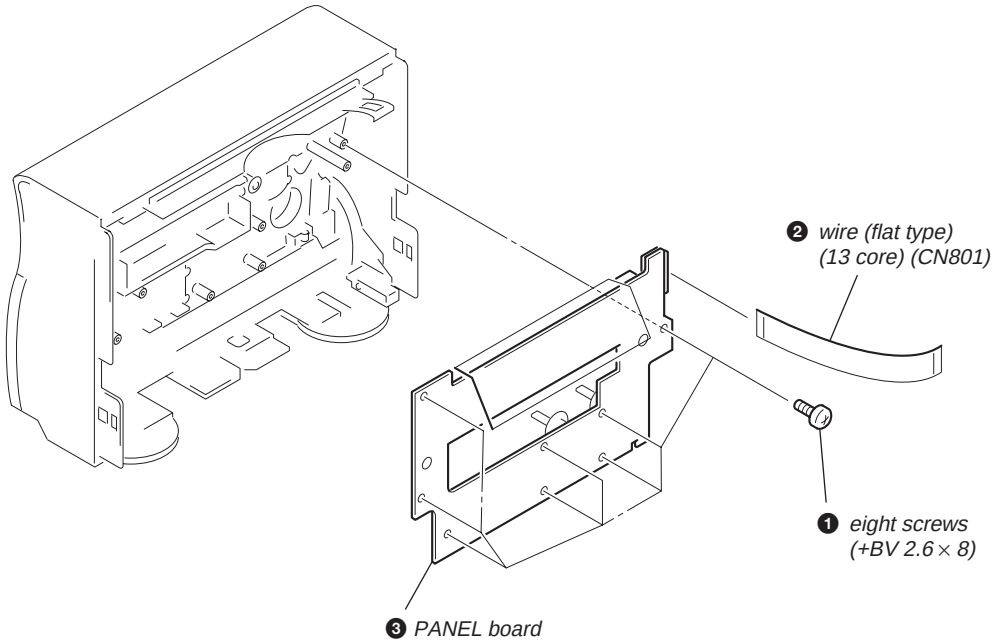

3-4. POWER TRANSFORMER

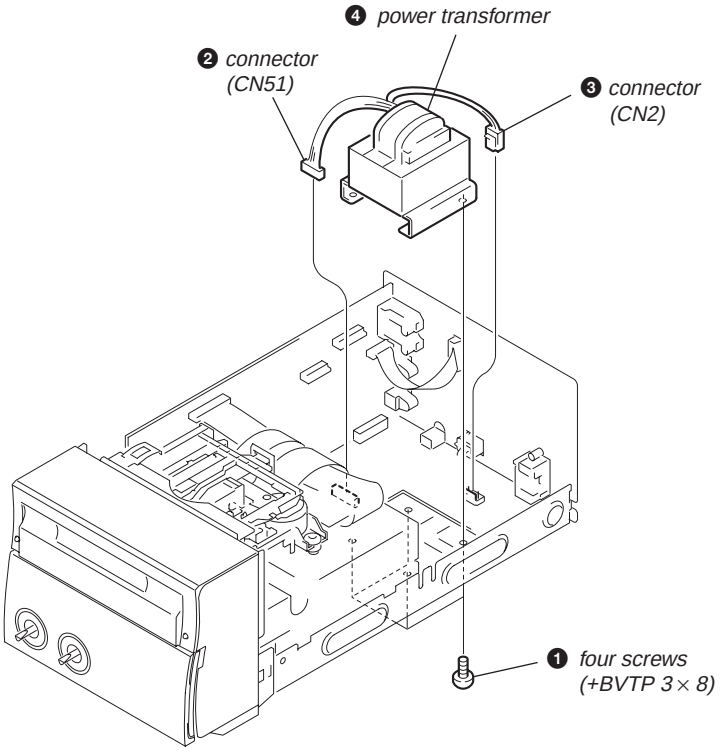

3-5. MD DIGITAL BOARD

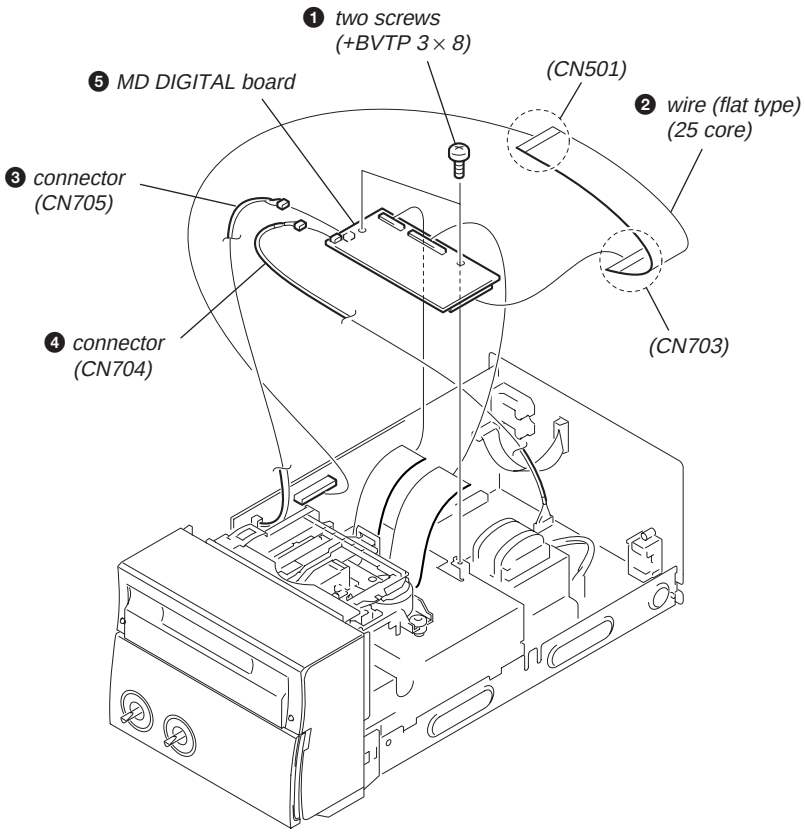

3-6. MD MECHANISM DECK (MDM-7S2D)

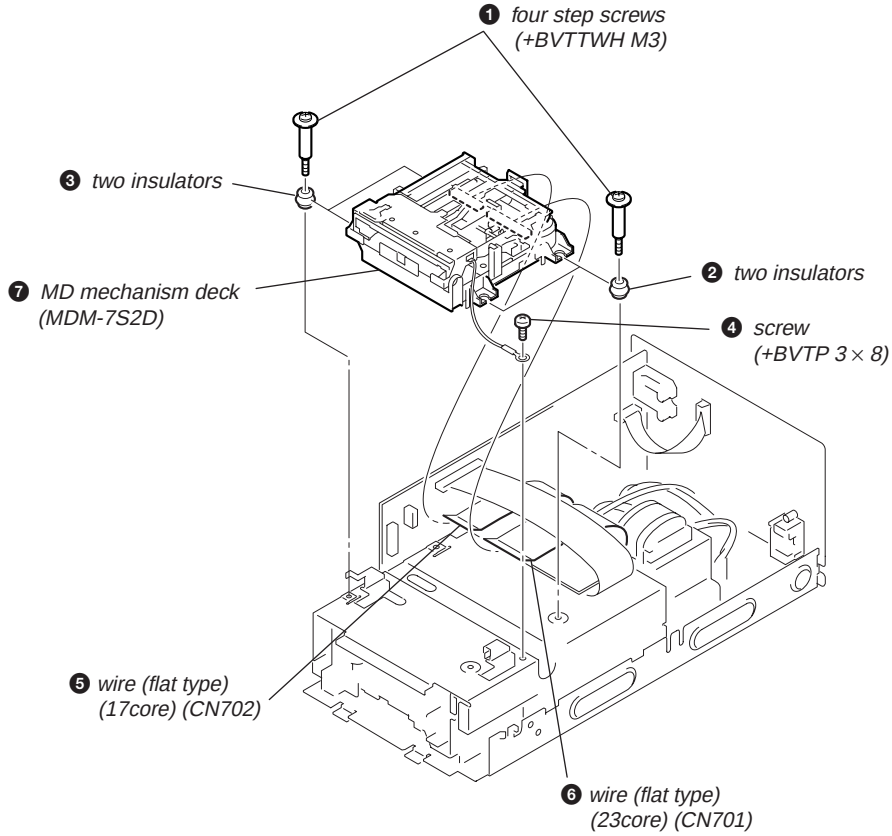

3-7. HOLDER ASSY

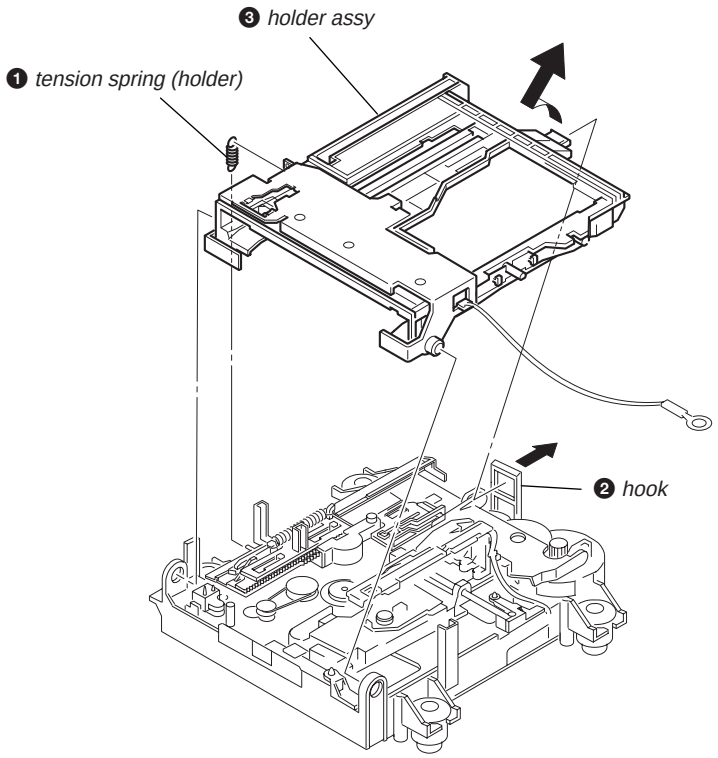

3-8. BD BOARD

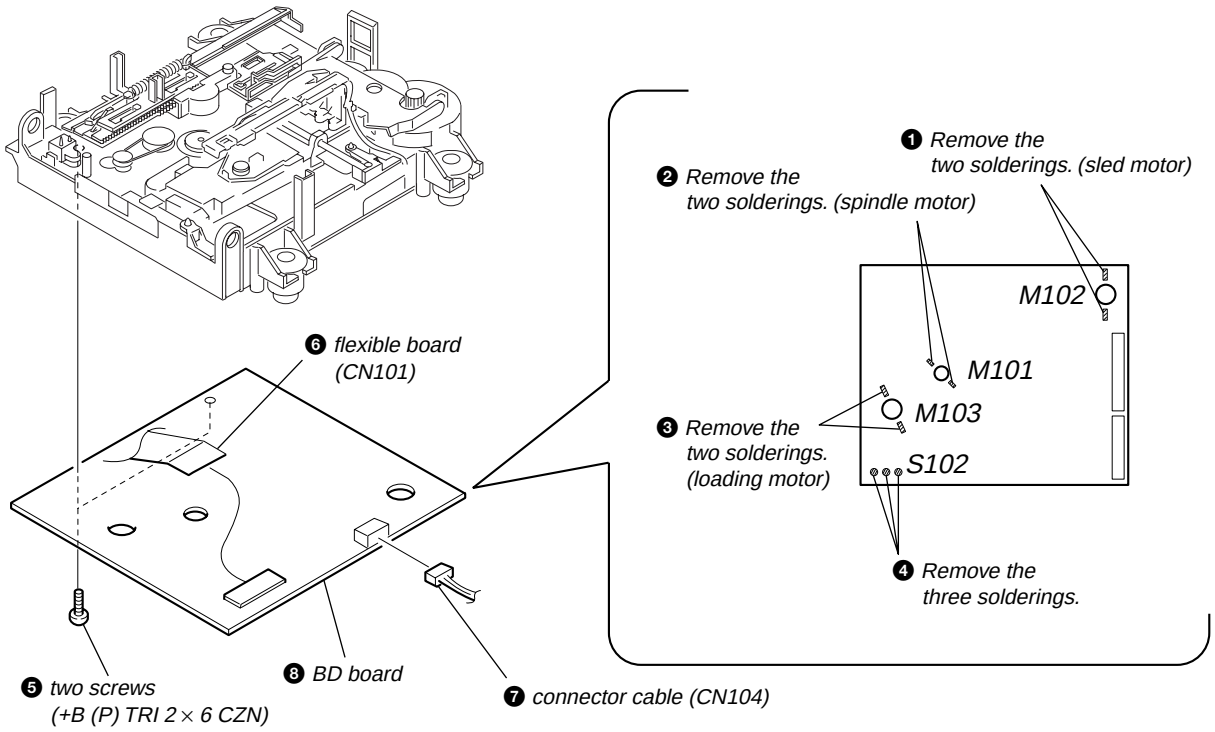

3-9. LOARDING MOTOR, SPINDLE MOTOR, SLED MOTOR

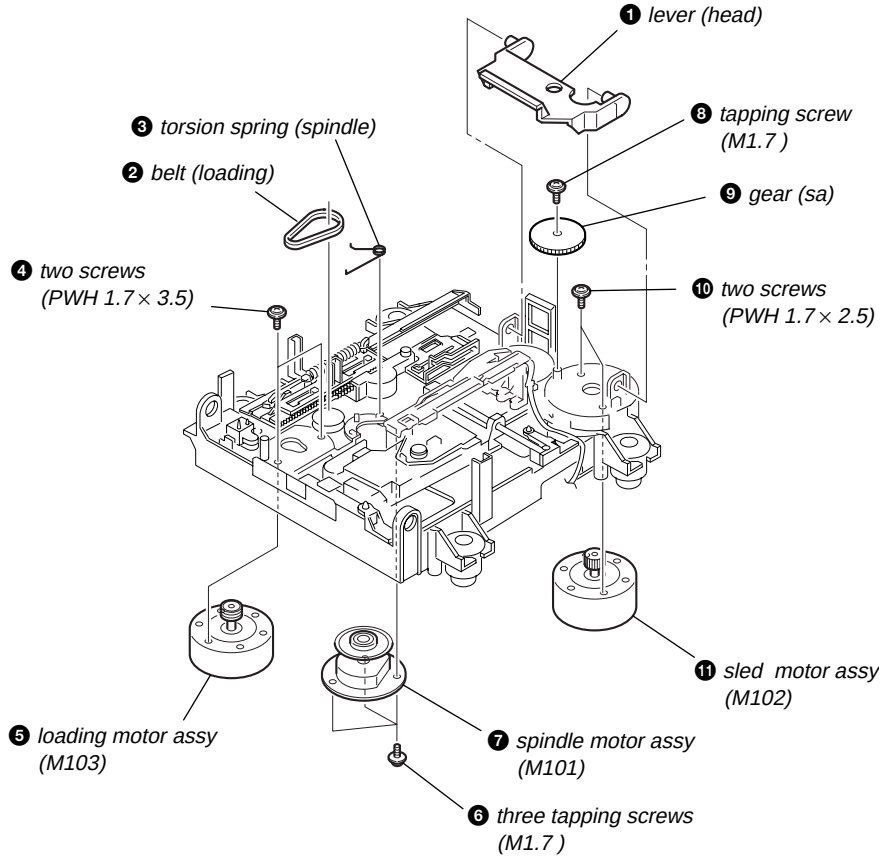

3-10. OVER WRITE HEAD (HR901)

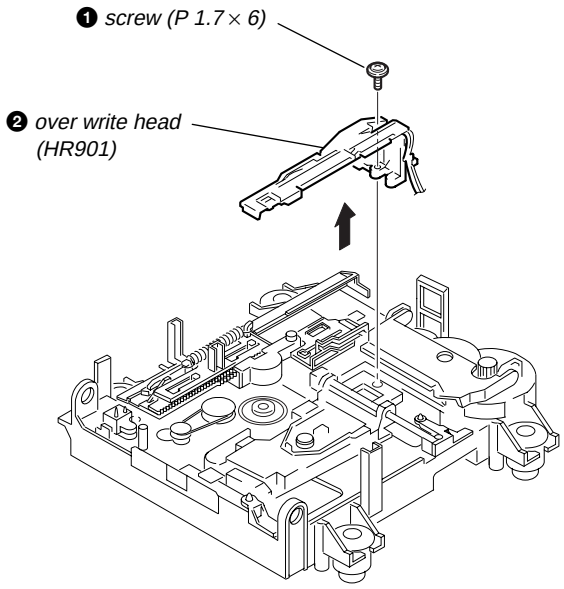

3-11. OPTICAL PICK-UP (KMS-262E)

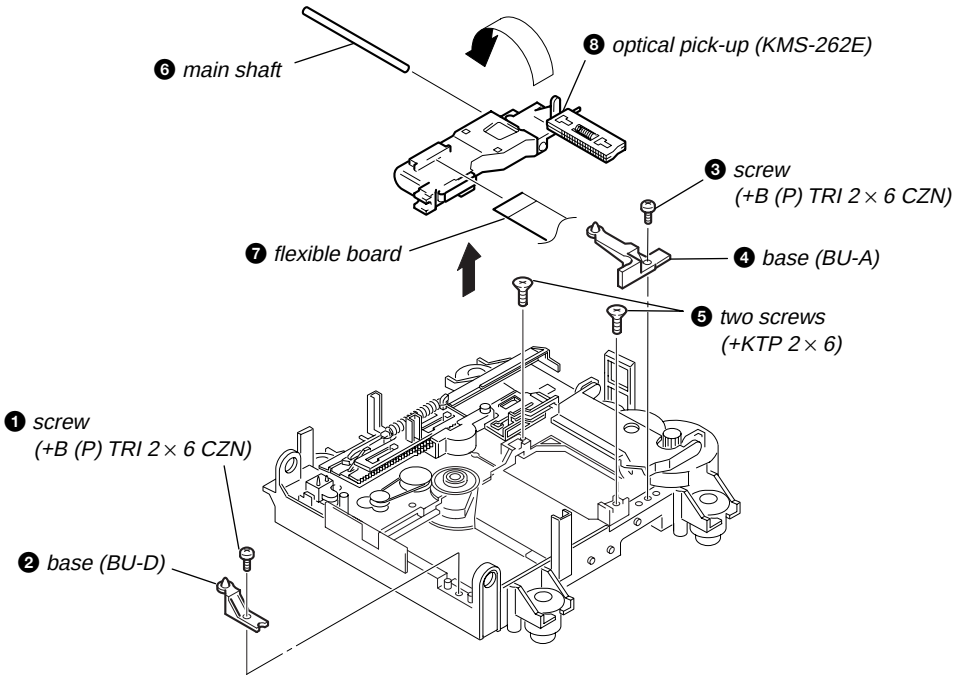

3-12. BRACKET (MDM)

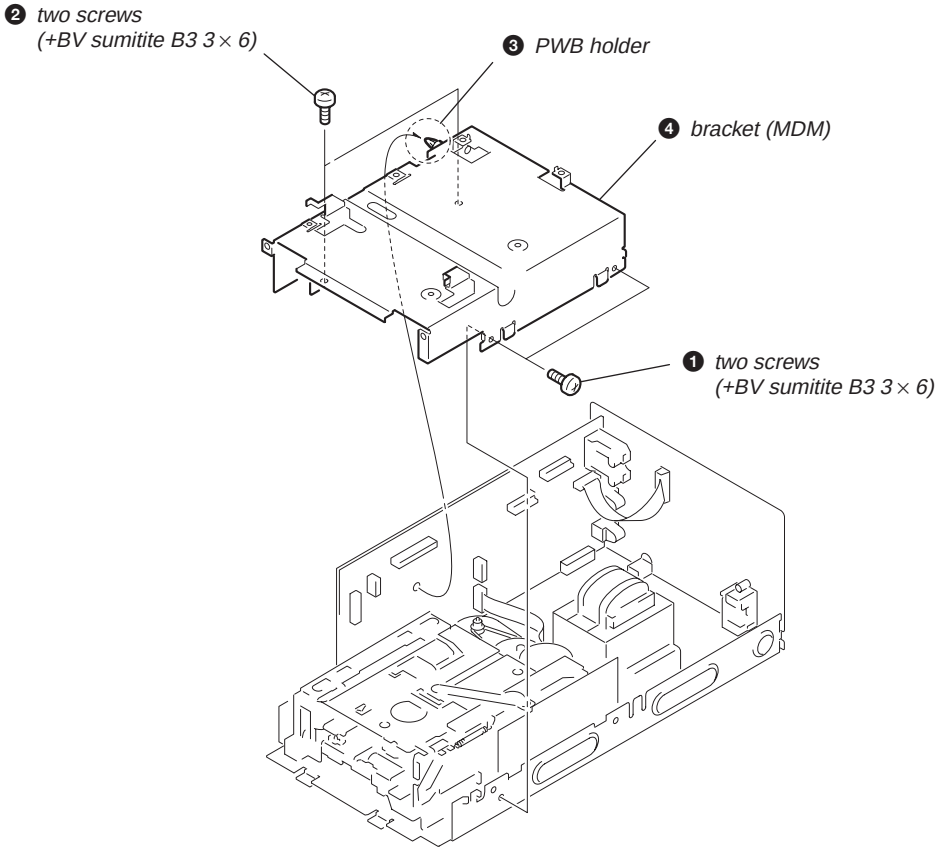

3-13. MAIN BOARD

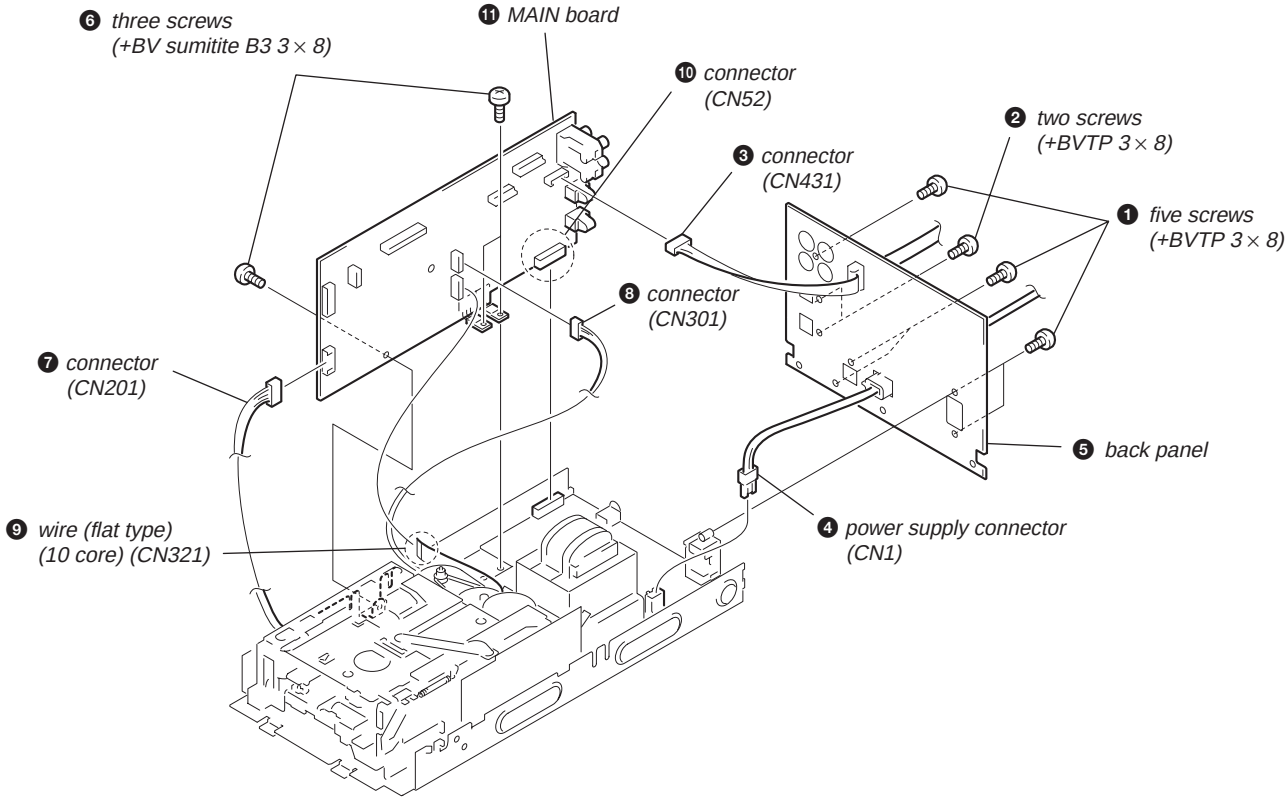

3-14. POWER BOARD

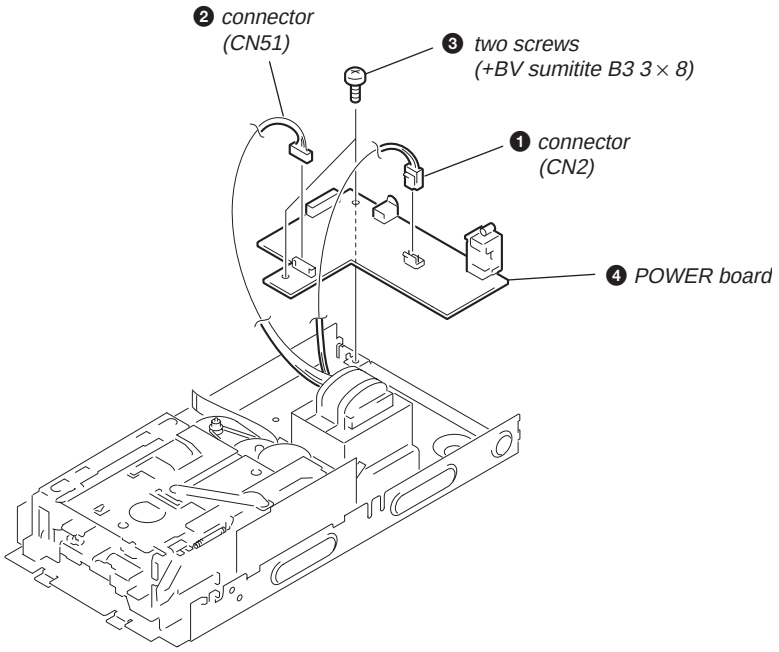

3-15. TAPE MECHANISM DECK

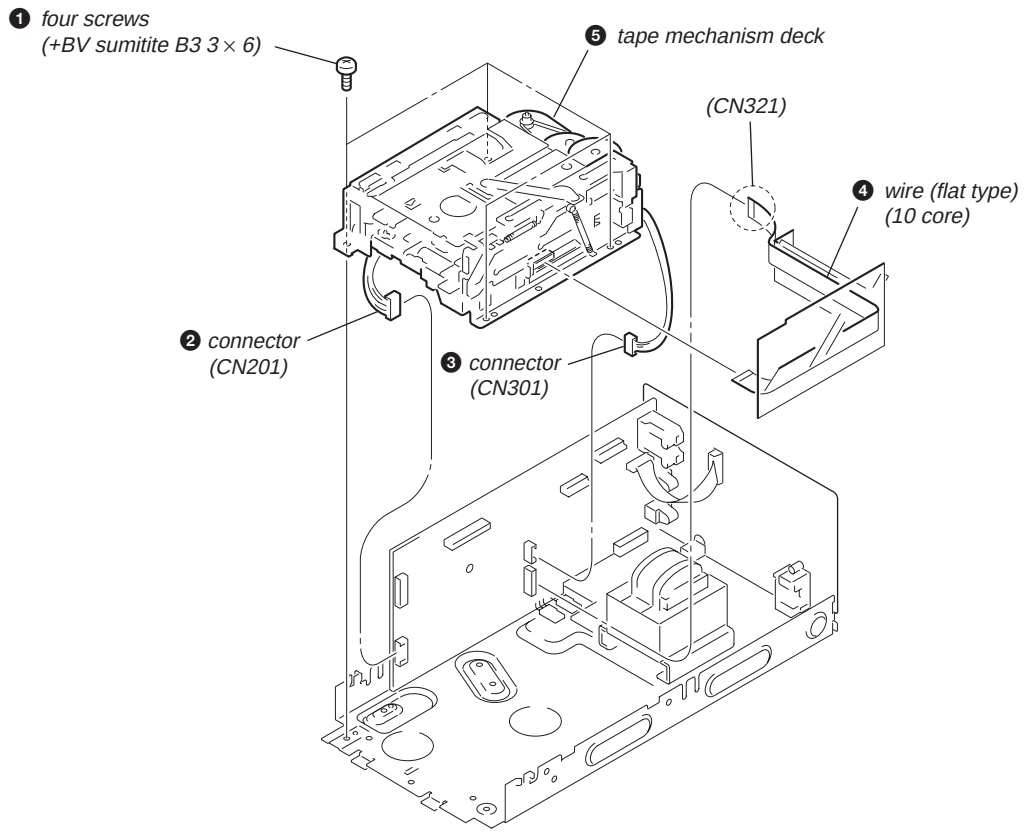

SECTION 4
TEST MODE

Note 1: MDS-SE9 does not operate independently. HCD-SE9 is required to operate this.
In this case of a service, please connect HCD-SE9.
Note 2: Incorrect operations may be performed if the test mode is not entered properly.
In this case, press the [I/⏻] button to turn the power off, and retry to enter the test mode.

1. Cold Reset

- The cold reset clears all data including preset data stored in the RAM to initial conditions. Execute this mode when returning the set to the customers.

Procedure:

1. Press the [I/⏻] button to turn the power on. (HCD-SE9)
2. Press three buttons [NET MD], [REC/REC IT] and [MD ■] simultaneously.
3. When this button is operated, display as "Initialize" for a while and all of the settings are reset.

2. Panel Test Mode

- This mode is used to check the software version, LCD, LED and keyboard.

Procedure:

1. Press the [I/⏻] button to turn on the power. (HCD-SE9)
2. Press three bottons [NET MD], [REC MODE] and [MD ■] simultaneously.
3. When the panel test mode is activated, all segments are turned on.

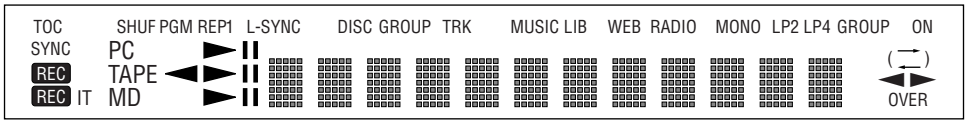

4. Press the [MD ■] stick to all segments are turned off.
5. When press the [MD ■] stick, following segments are turned on.

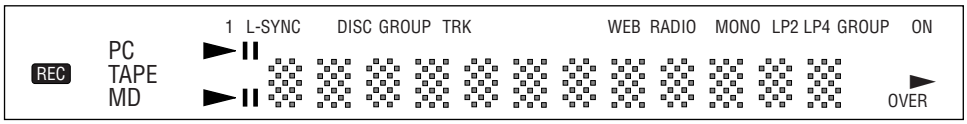

6. When press the [MD ■] stick, following segments are turned on.

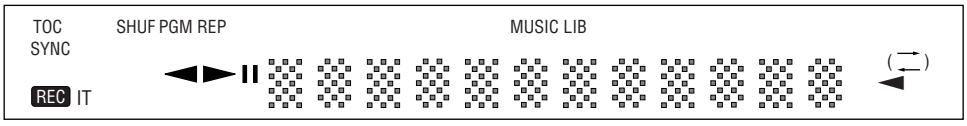

7. Press the [MD ■] stick to all segments are turned on again.
8. To exit from this mode, press the [I/⏻] button. (HCD-SE9)

3. Tape Test Mode

Procedure:

1. Press the [I/⏻] button to turn the power on. (HCD-SE9)
2. Press three buttons [⏏ TAPE], [TAPE REC] and [TAPE ◀◀] simultaneously.
3. The set goes to the tape test mode and the "►" segments flash.
4. Insert a recordable cassette tape.
5. Input audio signal into the analog input.
6. Press the [TAPE REC] button.
7. Select the recording direction with the [TAPE ◀▶] button.
8. Press the [TAPE ❚❚] button to start recording.
9. When the [TAPE ◀◀] or [TAPE ▶▶] stick against the tape recording direction is pressed, the tape returns to the recording started point and the set starts playback.
10. To exit from this mode, press the [I/⏻] button. (HCD-SE9)

4. Version Test Mode

Procedure:

1. Press the [I/⏻] button to turn on the power. (HCD-SE9)
2. Press three bottons [⏏ TAPE], [TAPE ❚❚] and [TAPE ■] simultaneously. The version of TC "TC x.xxx" is displayed.
3. Whenever press the [DISPLAY] button, the version is displayed in order of MD, USB and TC.
4. To exit from this mode, press the [I/⏻] button. (HCD-SE9)

5. Key Test Mode

Procedure:

1. Press the [I/⏻] button to turn on the power.(HCD-SE9)
2. Press three bottons [⏏ TAPE] , [TAPE ❚❚] and [TAPE ■] simultaneously, and be in the state of version test mode.
   Press [TAPE DIRECTION] button to select the key test mode.
3. In the key test mode, the LCD displays “KEY 1”. Each time a button is pressed, “KEY #” value increases. However, once a button is pressed, it is no longer taken into account. It is end at “KEY 19 OK”.
4. To exit from this mode, press the [I/⏻] button. (HCD-SE9)

MD TEST MODE

1. Precautions For Use of Test Mode

- As operations related to loading will be performed regardless of the test mode operations being performed, be sure to check that the disc is stopped before setting and removing it.
  Even if the [⏏ MD] button is pressed while the disc is rotating during continuous playback, continuous recording, etc., the disc will not stop rotating.
  Therefore, it will be ejected while rotating.
  Be sure to press the [⏏ MD] button after pressing the [MODE] button and the rotation of disc is stopped.

1-1. Recording Laser Emission Mode and Operating Buttons

- Continuous recording mode (CREC 2MODE) (C37)
- Laser power check mode (LDPWR CHECK) (C13)
- Laser power adjustment mode (LDPWR ADJUST) (C04)
- Comparison with initial Iop value written in nonvolatile memory (Iop Compare) (C27)
- Write current Iop value in read nonvolatile memory using microprocessor (Iop NV Save) (C06)
- Traverse (MO) check (EF MO CHECK) (C14)
- Traverse (MO) adjustment (EF MO ADJUST) (C07)
- When pressing the [REC/REC IT] button.

2. Setting the Test Mode

Procedure : 1. Press the [I/⏻] button to turn the power on. (HCD-SE9)
2. Press the [FUNCTION] button to enter “MD” mode. (HCD-SE9)
3. Press three buttons of [MD ■], [REC MODE] and [⏏ MD] simultaneously.
When the test mode is set, “[Check]” will be displayed. Pressing the [MD ⏮] or [MD ⏭] button between the following three groups; ··· ⟷ [Check] ⟷ [Service] ⟷ [Develop] ⟷ ···.

Note: Do not use the test mode in the [Develop] group.
If used, the unit may not operate normally.
If the [Develop] group is set accidentally, press the [MODE] button immediately to exit the [Develop] group.

3. Releasing the Test Mode

Press the [⏏ TAPE] button once and press the [I/⏻] button to turn the power off, the set goes to the standby mode.

4. Basic Operations of the Test Mode

All operations are performed using the [MD ⏮] , [MD ⏭], [ENTER/START], [MODE] and [TAPE REC] buttons.
The functions of these buttons are as follows.

Function name	Function
[ENTER/START] button	Proceeds onto the next step. Finalizes input
[MODE] button	Returns to previous step. Stops operations
[MD ⏮], [MD ⏭] buttons	Changes parameters and modes
[TAPE REC] button	Selects the sub menu

5. Selecting the Test Mode

There are 26 types of test modes as shown below. The groups can be switched by pressing the [MD ⏮] or [MD ⏭] button. After selecting the group to be used, press the [ENTER/START] button. After setting a certain group, pressing the [MD ⏮] or [MD ⏭] button switches modes shown below.
Refer to “Group” in the table for details can be selected.
All items used for servicing can be treated using group [Service]. So be carefully not to enter other groups by mistake.

Note: Do not use the test mode in the [Develop] group.
If used, the unit may not operate normally.
If the [Develop] group is set accidentally, press the [MODE] button immediately to exit the [Develop] group.

Display	No.	Details	Mark	Group	
				Check	Service
AUTO CHECK	C01	Automatic self-diagnosis			○
Err Display	C02	Error history display, clear			○
TEMP ADJUST	C03	Temperature compensation offset adjustment			○
LDPWR ADJUST	C04	Laser power adjustment			○
Iop Write	C05	Iop data writing			○
Iop NV Save	C06	Writes current Iop value in read nonvolatile memory using microprocessor			○
EF MO ADJUST	C07	Traverse (MO) adjustment			○
EF CD ADJUST	C08	Traverse (CD) adjustment			○
FBIAS ADJUST	C09	Focus bias adjustment			○
AG Set (MO)	C10	Auto gain output level adjustment (MO)			○
AG Set (CD)	C11	Auto gain output level adjustment (CD)			○
TEMP CHECK	C12	Temperature compensation offset check		○	○
LDPWR CHECK	C13	Laser power check		○	○
EF MO CHECK	C14	Traverse (MO) check		○	○
EF CD CHECK	C15	Traverse (CD) check		○	○
FBIAS CHECK	C16	Focus bias check		○	○
ScurveCHECK	C17	S-curve check	×	○	
VERIFYMODE	C18	Nonvolatile memory check	×	○	
DETRK CHECK	C19	Detrack check	×	○	
0920 CHECK	C25	Most circumference check	×	○	
Iop Read	C26	Iop data display		○	○
Iop Compare	C27	Comparison with initial Iop value written in nonvolatile memory		○	○
ADJ CLEAR	C28	Initialization of nonvolatile memory for adjustment values			○
INFORMATION	C31	Display of microprocessor version, etc.		○	○
CPLAY 2MODE	C36	Continuous playback mode		○	○
CREC 2MODE	C37	Continuous recording mode		○	○

- For details of each adjustment mode, refer to “SECTION 6 ELECTRICAL ADJUSTMENTS”.
  About “Err Display” (C02), please refer to a page 7 self-diagnostic function.
- If a different mode has been selected by mistake, press the [MODE] button to release that mode.
- Modes with (×) in the Mark column are not used for servicing and therefore are not described in detail. If these modes are set accidentally, press the [MODE] button to release the mode immediately.

5-1. Operating the Continuous Playback Mode

1. Entering the continuous playback mode
   (1) Set the disc in the unit. (Whichever recordable discs or discs for playback only are available)
   (2) Press the [MD ⏮] or [MD ⏭] button to display “CPLAY 2MODE” (C36).
   (3) Press the [ENTER/START] button to change the display to “CPLAY2MID”.
   (4) When access completes, the display changes to “C = □□□□ AD = □□)”.
   Note: The numbers “ □ ” on the display show you error rates and ADER.
2. Changing the parts to be played back
   (1) Press the [ENTER/START] button during continuous playback to change the display as below.

   “CPLAY 2MID” → “CPLAY 2OUT” → “CPLAY 2IN”

   When pressed another time, the parts to be played back can be moved.
   (2) When access completes, the display changes to “C = □□□□ AD = □□)”.
   Note: The numbers “ □ ” on the display show you error rates and ADER.
3. Ending the continuous playback mode
   (1) Press the [MODE] button. The display will change to “CPLAY 2MODE” (C36).
   (2) Press the [⏏ MD] button and take out the disc.
   Note : The playback start addresses for IN, MID, and OUT are as follows.
   IN : 40h cluster
   MID : 300h cluster
   OUT : 700h cluster

5-2. Operating the Continuous Recording Mode (Use only when performing self-recording/playback check)

1. Entering the continuous recording mode
   (1) Set a recordable disc in the unit.
   (2) Press the [MD ⏮] or [MD ⏭] button to display "CREC 2MODE" (C37).
   (3) Press the [ENTER/START] button to change the display to "CREC 2MID".
   (4) When access completes, the display changes to "CREC 2(⬚⬚⬚⬚)" and " REC " lights up.
   Note: The numbers " ⬚ " on the displayed show you the recording position addresses.
2. Changing the parts to be recorded
   (1) When the [ENTER/START] button is pressed during continuous recording, the display changes as below.

   "CREC 2MID" → "CREC 2OUT" → "CREC 2IN"

   When pressed another time, the parts to be recorded can be changed. " REC " goes off.
   (2) When access completes, the display changes to "CREC 2(⬚⬚⬚⬚)" and " REC " lights up.
   Note: The numbers " ⬚ " on the display show you the recording position addresses.
3. Ending the continuous recording mode
   (1) Press the [MODE] button. The display changes to "CREC 2MODE" (C37) and " REC " goes off.
   (2) Press the [⏏ MD] button and take out the disc.
   Note 1: The recording start addresses for IN, MID, and OUT are as follows.
   IN : 40h cluster
   MID : 300h cluster
   OUT : 700h cluster
   Note 2: The [MODE] button can be used to stop recording anytime.
   Note 3: Do not perform continuous recording for long periods of time above 5 minutes.
   Note 4: During continuous recording, be careful not to apply vibration.

6. Functions of Other Buttons

Function	Contents
MD ► ❚❚	Sets continuous playback when this is pressed in the STOP state. When this is pressed during continuous playback, tracking power servo turns ON/OFF.
MD ■	Stops continuous playback and continuous recording
TAPE ►►	The sled moves to the outer circumference only when this is pressed
TAPE ◄◄	The sled moves to the inner circumference only when this is pressed
TAPE DIRECTION	Switches the spindle servo mode (CLV S ↔ CLV A)
REC MODE	Switches the pits or grooves each time the button is pressed
⏏ MD	Ejects the disc
⏏ TAPE	Releases the test mode
TAPE ❚❚	Clears the setting of pits and groove, and judges pits and groove again.
REC/REC IT	When it is pressed while servo is turning on, the recording starts from present position.
DISPLAY	Switches the display mode

7. Automatic Self-diagnosis Function

This test mode performs CREC and CPLAY automatically for mainly checking the characteristics of the optical pick-up.
To perform this test mode, the laser power must first be checked.
Perform AUTO CHECK after the laser power check and Iop Compare.

Procedure:

1. Display "AUTO CHECK" and press the [ENTER/START] button. If "LDPWR ミチェック" is displayed, it means that the laser power check has not been performed. In this case, perform the laser power check and Iop Compare (C27), and then repeat from step1.
2. If a disc is in the mechanical deck, it will be ejected forcibly.
   "DISC IN" will be displayed in this case. Load a test disc (MDW-74/GA-1) which can be recorded.
3. If a disc is loaded at step 2, the check will start automatically.
4. When "XX CHECK" is displayed, the item corresponding to XX will be performed.
   When "06 CHECK" completes, the disc loaded at step 2 will be ejected. "DISC IN" will be displayed. Load the check disc (TDYS-1).
5. When the disc is loaded in step 4, the check will automatically be resumed from "07 CHECK".
6. After completing to "0C CHECK", check OK or NG will be displayed. If all items are OK, "CHK ALL OK" will be displayed. If any item is NG, it will be displayed as "NG:xxxx".

When "CHK ALL OK" is displayed, it means that the optical pick-up is normal. Check the operations of other parts (spindle motor, sled motor, etc.).
When displayed as "NG:xxxx", it means that the optical pick-up is faulty. In this case, replace the optical pick-up.

SECTION 5
MECHANICAL ADJUSTMENTS

PRECAUTION

1. Clean the following parts with a denatured-alcohol-moistened **swab:**

record/playback head pinch roller
erase head rubber belts
capstan

2. Demagnetize the record/playback head with a head demagnetizer.
   (Do not bring the head demagnetizer close to the erase head.)
3. Do not use a magnetized screwdriver for the adjustments.
4. The adjustments should be performed with the rated power supply voltage unless otherwise noted.

Torque Measurement

Torque	Torque Meter	Meter Reading
FWD	CQ-102C	2.94 to 7.74mN •m (30 to 79g •cm)
FWD back tension	CQ- 102C	0.20 to 0.59mN •m (2 to 6g •cm)
REV	CQ- 102RC	2.94 to 7.74mN •m (30 to 79g •cm)
REV back tension	CQ-102RC	0.20 to 0.59mN •m (2 to 6g •cm)
FF,REW	CQ- 201B	6.86 to 17.64mN •m (70 to 179g •cm)
FWD tension	CQ-403A	9.80mN •m or more (100g •cm or more)
REV tension	CQ-403R	9.80mN •m or more (100g •cm or more)

SECTION 6
ELECTRICAL ADJUSTMENTS

TAPE SECTION **0 dB=0.775V**

1. Demagnetize the record/playback head with a head demagnetizer.
2. Do not use a magnetized screwdriver for the adjustments.
3. The adjustments should be performed with the rated power supply voltage unless otherwise noted.
4. The adjustments should be performed in the order given in this service manual. (As a general rule, playback circuit adjustment should be completed before performing recording circuit adjustment.)
5. The adjustments should be performed for both L-CH and R-CH.
6. Switches and controls should be set as follows unless otherwise specified.

Tape	Signal	Used for
P-4-A100	10 kHz, –10 dB	Azimuth Adjustment
WS-48B	3 kHz, 0 dB	Tape Speed Adjustment

Record/Playback Head Azimuth Adjustment

Procedure:

1. Mode : Playback

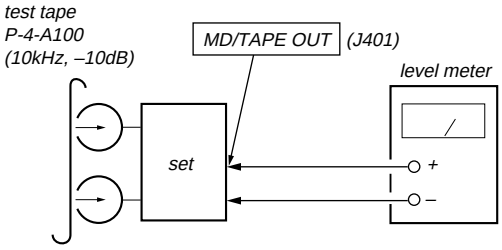

2. Turn the adjustment screw and check output peaks. If the peaks do not match for L-CH and R-CH, turn the adjustment screw so that outputs match within 1 dB of peak.

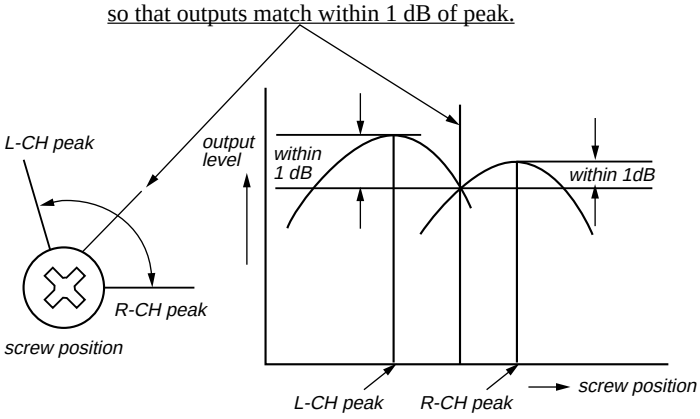

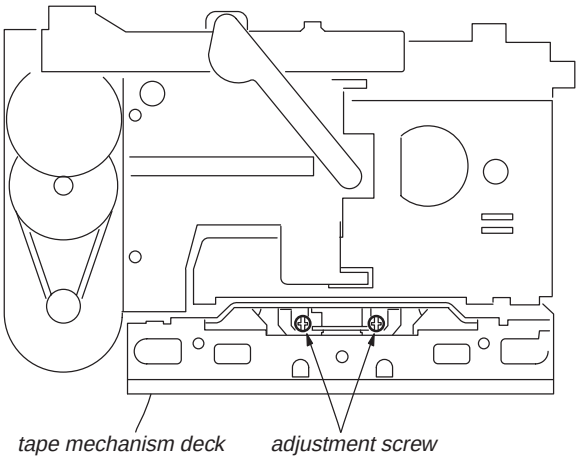

3. Mode: Playback

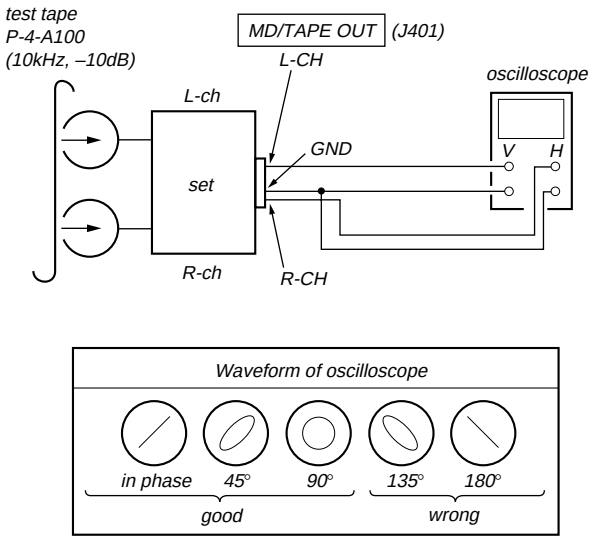

4. After the adjustments, apply suitable locking compound to the parts adjusted.

Adjustment Location: REC/PB Head

Tape Speed Check

Procedure:

1. MODE : FWD Playback.

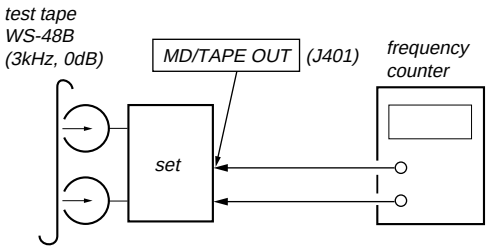

2. Insert the WS-48B into deck.
3. Press the TAPE ◀▶ button of deck.
4. Check the reading of frequency counter becomes 3000 ± 90 Hz. If these level do not satisfy adjustment level, adjust the RV321.

Adjustment Location: MAIN BOARD

Sample Value of Wow and flutter

W.RMS (JIS) less than 0.35%
(test tape: WS-48B)

Record Bias Adjustment

Procedure :

1. Press the FUNCTION button to select TAPE. (HCD-SE9)
2. Insert a tape into deck, press the TAPE REC button, and then press the TAPE ❚❚ button to start recording.
3. Mode : Record

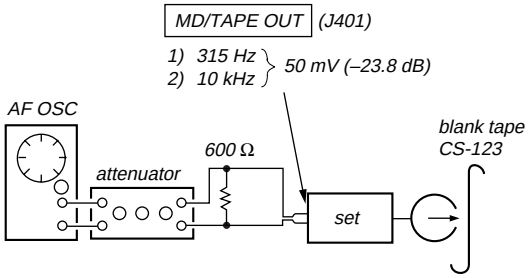

4. Mode : Playback

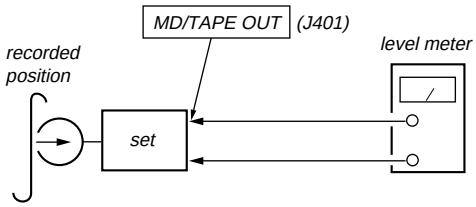

5. Confirm playback the signal recorded in step become adjustment level as follows
   If these levels do not satisfy adjustment level, adjust the RV241 (L-CH) and RV291 (R-CH) on the MAIN board to repeat steps 3 and 4.

Adjustment level : The playback output of 10kHz level difference against 315Hz reference should be 0 ± 3.0dB.

Adjustment Location :

[MAIN BOARD](SIDE B)

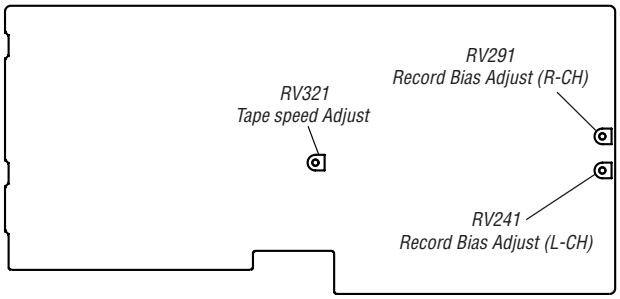

MD SECTION

1. Parts Replacement and Adjustment

If malfunctions caused by optical pick-up such as sound skipping are suspected, follow the following check.

Check before replacement

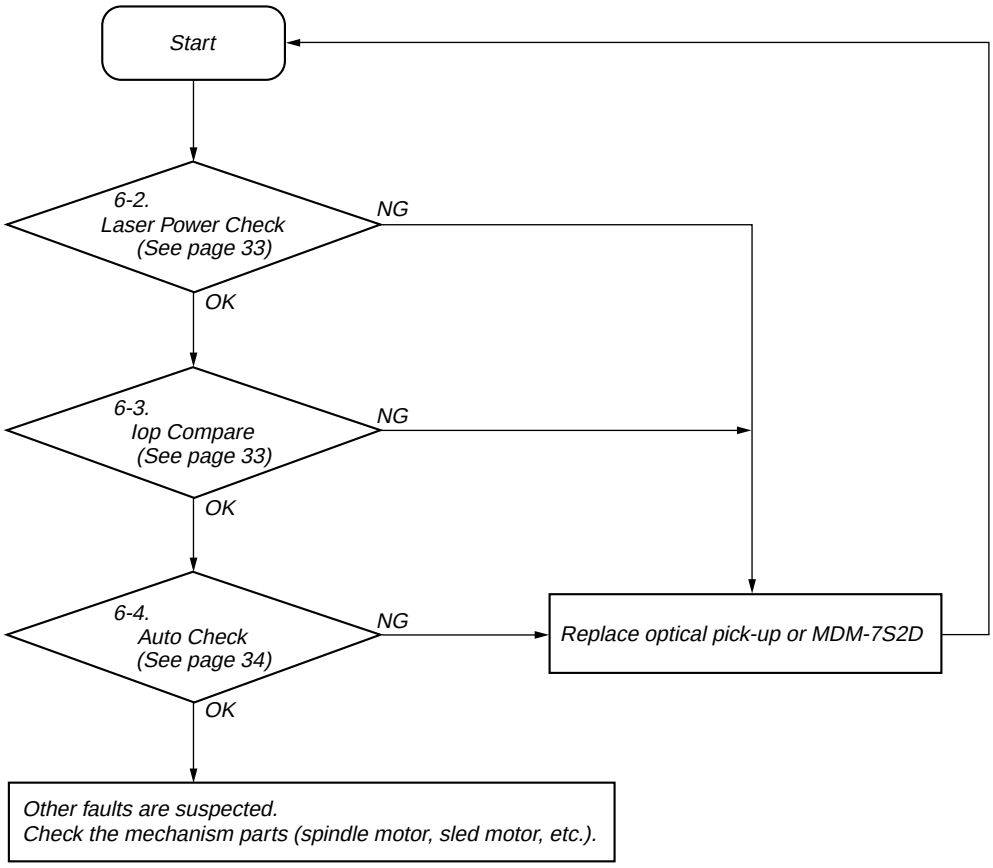

Flow Chart for Adjustment

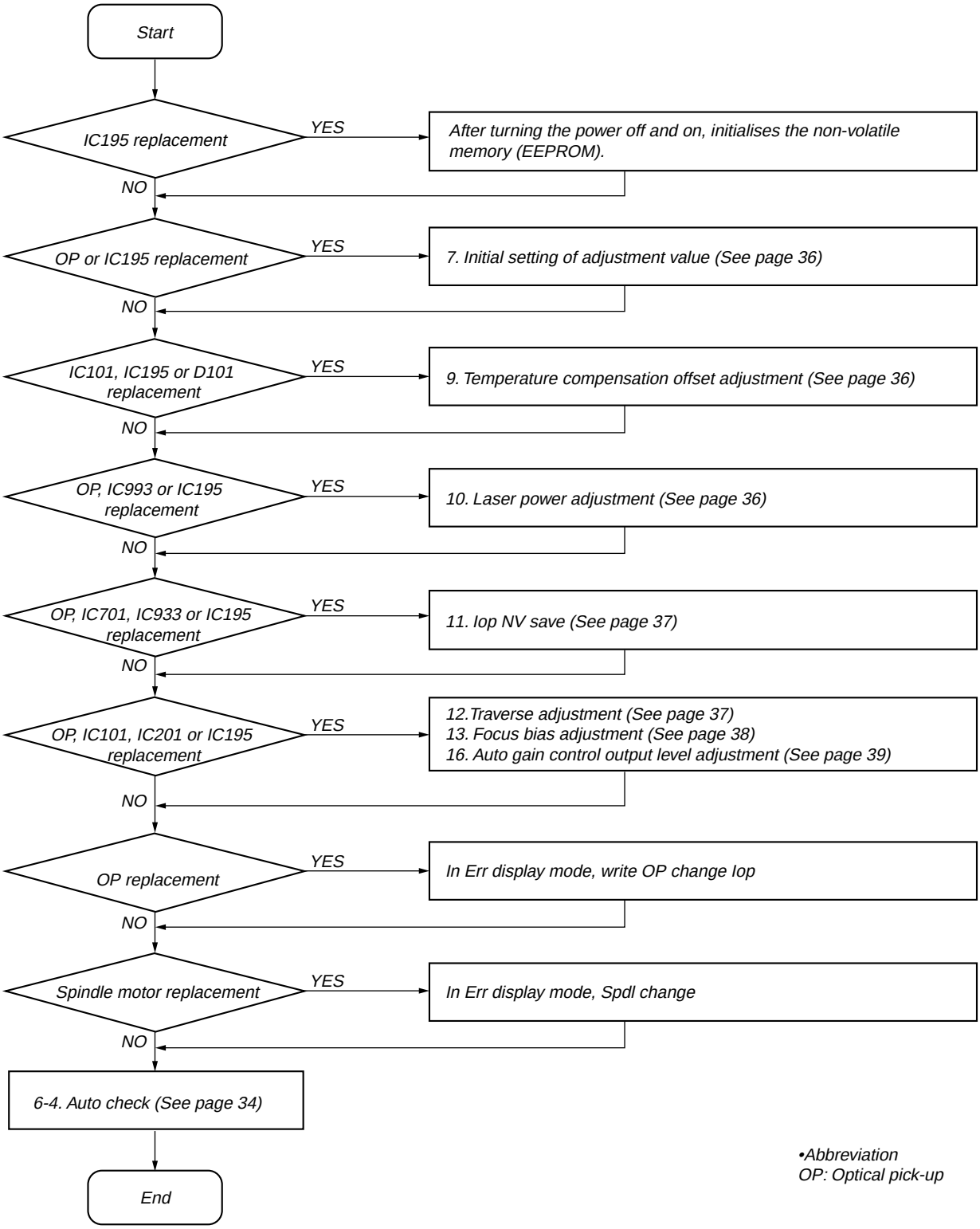

•Abbreviation
OP: Optical pick-up

2. Precautions for Checking Laser Diode Emission

To check the emission of the laser diode during adjustments, never view directly from the top as this may lose your eye-sight.

3. Precautions for Use of Optical Pick-Up (KMS-262A/262E)

As the laser diode in the optical pick-up is easily damaged by static electricity, solder the laser tap of the flexible board when handling it. Before disconnecting the connector, perform soldering bridge to the laser tap. Before connecting the connector, be careful not to remove the solder. Also take adequate measures to prevent damage by static electricity. Handle the flexible board with care as it breaks easily.

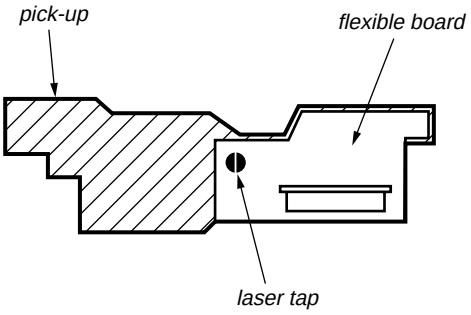

Optical pick-up flexible board

Before starting adjustment:
The adjustment value differs depending on the types (KMS-262A or KMS-262E) of optical pickup. Be sure to confirm the type name before starting adjustment.

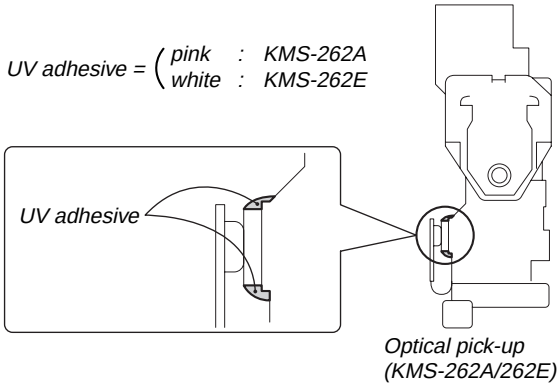

4. Precautions for Adjustments

1. When replacing the following parts, perform the adjustments and checks with ○ in the order shown in the following table.
2. Set the MD test mode when performing adjustments.
   After completing the adjustments, exit the MD test mode.
   Perform the adjustments and checks in “Group Service” of the MD test mode.
3. Perform the adjustments to be needed in the order shown.
4. Use the following tools and measuring devices.

- Check Disc (TDYS-1) (Part No. : 4-963-646-01)
- Test Disk (MDW-74/GA-1) (Part No. : 4-229-747-01)
- Laser power meter LPM-8001 (Part No. : J-2501-046-A)
  or
  MD Laser power meter 8010S (Part No. : J-2501-145-A)*1
  - Oscilloscope (Measure after performing CAL of prove.)
  - Digital voltmeter
  - Thermometer
  - Jig for checking BD board waveform
    (Part No. : J-2501-196-A)

5. When observing several signals on the oscilloscope, etc., make sure that VC and ground do not connect inside the oscilloscope.
   (VC and ground will become short-circuited.)
6. Using the above jig enables the waveform to be checked without the need to solder.
   (Refer to Servicing Notes on page 11)
7. As the disc used will affect the adjustment results, make sure that no dusts nor fingerprints are attached to it.

*1 **Laser power meter**
When performing laser power checks and adjustment (electrical adjustment), use of the new MD laser power meter 8010S (Part No. J-2501-145-A) instead of the conventional laser power meter is convenient.
It sharply reduces the time and trouble to set the laser power meter sensor onto the objective lens of optical pick-up.

Adjustment	Parts to be replaced						
	Optical Pick-up	IC101	IC701	IC201	IC993	IC195	D101
7. Initial setting of adjustment value	○	×	×	×	×	○	×
8. Recording of Iop information	○	×	×	×	×	○	×
9. Temperature compensation offset adjustment	×	○	×	×	×	○	○
10. Laser power adjustment	○	×	×	×	○	○	×
11. Iop NV Save	○	×	○	×	○	○	×
12. Traverse adjustment	○	○	×	○	×	○	×
13. Focus bias adjustment	○	○	×	○	×	○	×
16. Auto gain adjustment	○	○	×	○	×	○	×
6-4. AUTO CHECK	○	○	×	○	○	○	×

5. Using the Continuously Recorded Disc

* This disc is used in focus bias adjustment and error rate check. The following describes how to create a continuous recording disc.

1. Insert a disc (blank disc) commercially available.
2. Press the MD ⏮ or MD ⏭ button and display "CREC 2MODE" (C37).
3. Press the ENTER/START button again to display "CREC 2 MID".
   Display "CREC 2(0300)" and start to recording.
4. Complete recording within 5 minutes.
5. Press the MODE button and stop recording .
6. Press the ⏏ MD button and remove the disc.

The above has been how to create a continuous recorded data for the focus bias adjustment and error rate check.

Note: Be careful not to apply vibration during continuous recording.

6. Checks Prior to Repairs

These checks are performed before replacing parts according to "approximate specifications" to determine the faulty locations. For details, refer to "Checks Prior to Parts Replacement and Adjustments in MD" (see page 30).

6-1. Temperature Compensation Offset Check

When performing adjustments, set the internal temperature and room temperature to 22ºC to 28ºC.

Procedure:

1. Press the MD ⏮ or MD ⏭ button to display "TEMP CHECK" (C12).
2. Press the ENTER/START button.
3. "T=@@(##) [OK]" should be displayed. If "T=@@ (##) [NG]" is displayed, it means that the results are bad.
   (@@ indicates the current value set, and ## indicates the value written in the non-volatile memory.)

6-2. Laser Power Check

Before checking, check the Iop value of the optical pick-up.
Refer to 8. Recording and Displaying the Iop Information (see page 36).

Connection:

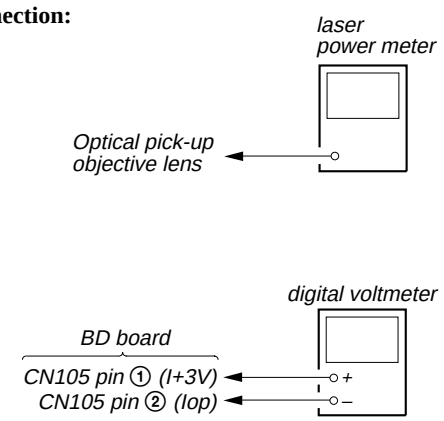

Procedure:

1. Set the laser power meter on the objective lens of the optical pick-up. (When it cannot be set properly, press the TAPE ◀◀ button or TAPE ▶▶ button to move the optical pick-up.)
   Connect the digital volt meter to CN105 pin ① (I+3V) and CN105 pin ② (Iop).
2. Then, press the MD ⏮ or MD ⏭ button and display "LDPWR CHECK" (C13).
3. Press the ENTER/START button once and display "L 0.93mW$□□". Check that the reading of the laser power meter becomes specified value.

Specified Value:

KMS-262A	0.84 to 0.92mW
KMS-262E	0.90 to 0.96mW

4. Press the ENTER/START button once more and display " L 8.65mW$□□". Check that the reading the laser power meter and digital volt meter satisfy the specified value.

Note : Never allow the laser emission at 8.65mW for 15 seconds or longer.

Specified Value:

Laser power meter reading :

KMS-262A	8.10 to 8.70mW
KMS-262E	8.40 to 8.90mW

Digital voltmeter reading : Optical pick-up displayed value ± 10%

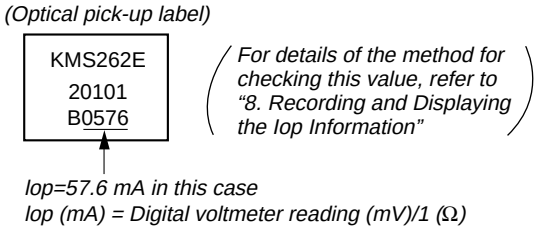

5. Press the MODE button and display "LDPWR CHECK" (C13) and stop the laser emission.
   (The MODE button is effective at all times to stop the laser emission.)

Note: After step 4, each time the ENTER/START button is pressed, the display will be switched to "L 0.73mW$□□"and "L 7.70mW$□□" "L WPホセイ$□□". Nothing needs to be performed here.

Checking Location: BD board (see page 40)

6-3. Iop Compare

The current Iop value at laser power 8.65mW (KMS-262E) or 8.4mW (KMS-262A) output and reference Iop value (set at shipment) written in the nonvolatile memory are compared, and the rate of increase/decrease will be displayed in percentage.

Note: Perform this function with the optical pick-up set at room temperature.

Procedure:

1. Press the MD ⏮ or MD ⏭ button to display "Iop Compare" (C27).
2. Press the ENTER/START button and start measurements.
3. When measurements complete, the display changes to "± xx% yy".
   xx is the percentage of increase/decrease, and OK or NG is displayed at yy to indicate whether the percentage of increase/decrease is within the allowable range.
4. Press the MODE button to end.

6-4. Auto Check

This test mode performs CREC and CPLAY automatically for mainly checking the characteristics of the optical pick-up. To perform this test mode, the laser power must first be checked. Perform Auto Check after the laser power check and Iop compare.

Procedure:

1. Display "AUTO CHECK" and press the ENTER/START button. If "LDPWR ミチェック" is displayed, it means that the laser power check has not been performed. In this case, perform the laser power check and Iop Compare, and then repeat from step1.
2. If a disc is in the mechanical deck, it will be ejected forcibly. "DISC IN" will be displayed in this case. Load a test disc (MDW-74/GA-1) which can be recorded.
3. If a disc is loaded at step 2, the check will start automatically.
4. When "XX CHECK" is displayed, the item corresponding to XX will be performed.
   When "06 CHECK" completes, the disc loaded at step 2 will be ejected. "DISC IN" will be displayed. Load the check disc (TDYS-1).
5. When the disc is loaded in the step 4, the check will automatically be resumed from "07 CHECK".
6. After completing to "0C CHECK", check OK or NG will be displayed. If all items are OK, "CHK ALL OK" will be displayed. If any item is NG, it will be displayed as "NG:xxxx".

When "CHK ALL OK" is displayed, it means that the optical pick-up is normal. Check the operations of other parts (spindle motor, sled motor, etc.).

When displayed as "NG:xxxx", it means that the optical pick-up is faulty. In this case, replace the optical pick-up.

6-5. Other Checks

All the following checks are performed by the Auto Check mode. They therefore need not be performed in normal operation.

6-6. Traverse Check
6-7. Focus Bias Check
6-8. C PLAY Check
6-9. Self-Recording/Playback Check

6-6. Traverse Check

Note 1: Data will be erased during MO reading if a recorded disc is used in this adjustment.

Note 2: If the traverse waveform is not clear, connect the oscilloscope as shown in the following figure so that it can be seen more clearly.

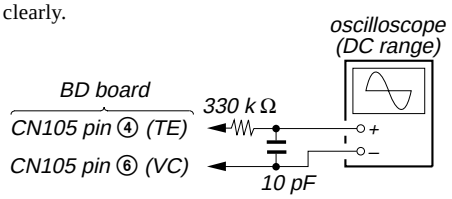

Connection:

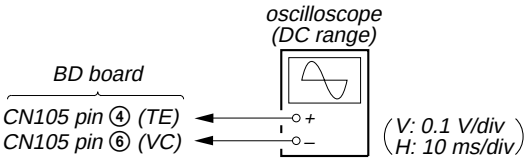

Procedure:

1. Connect an oscilloscope to CN105 pin ④ (TE) and CN105 pin ⑥ (VC) on the BD board.
2. Load a disc (any available on the market). (Refer to Note 1)
3. Press the TAPE ▶▶ button to move the optical pick-up outside the pit.
4. Press the MD ⏮ or MD ⏭ button to display "EF MO CHECK"(C14).
5. Press the ENTER/START button to display "EFB = ⬚⬚ MO-R".
   (Laser power READ power/Focus servo ON/tracking servo OFF/ spindle (S) servo ON)
6. Observe the waveform of the oscilloscope, and check that the specified value is satisfied. Do not press the MD ⏮ or MD ⏭ button.
   (Read power traverse checking)

Traverse Waveform

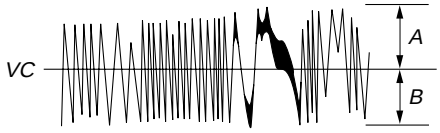

Specified value : Below 10% offset value

$$\text{Offset value (\%)} = \frac{|A - B|}{2(A + B)} \times 100$$

7. Press the ENTER/START button to display "EFB = ⬚⬚ MO-W".
8. Observe the waveform of the oscilloscope, and check that the specified value is satisfied. Do not press the MD ⏮ or MD ⏭ button.
   (Write power traverse checking)

Traverse Waveform

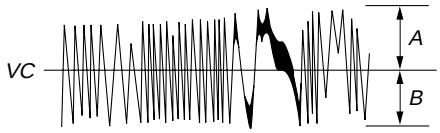

Specified value : Below 10% offset value

$$\text{Offset value (\%)} = \frac{|A - B|}{2(A + B)} \times 100$$

9. Press the [ENTER/START] button to display "EFB = ▯▯ MO-P".
   Then, the optical pick-up moves to the pit area automatically and servo is imposed.
10. Observe the waveform of the oscilloscope, and check that the specified value is satisfied. Do not press the [MD ⏮] or [MD ⏭] button.

Traverse Waveform

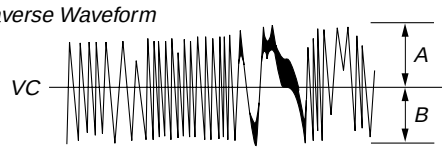

Specified value : Below 10% offset value

$$\text{Offset value (\%)} = \frac{|A - B|}{2\,(A + B)} \times 100$$

11. Press the [MODE] button to display "EF MO CHECK" (C14).
    The disc stops rotating automatically.
12. Press the [⏏ MD] button and take out the disc.
13. Load the check disc (TDYS-1).
14. Press the [MD ⏮] or [MD ⏭] button and display "EF CD CHECK" (C15).
15. Press the [ENTER/START] button to display "EFB = ▯▯ CD".
    Servo is imposed automatically.
16. Observe the waveform of the oscilloscope, and check that the specified value is satisfied. Do not press the [MD ⏮] or [MD ⏭] button.

Traverse Waveform

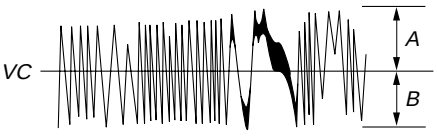

Specified value : Below 10% offset value

$$\text{Offset value (\%)} = \frac{|A - B|}{2\,(A + B)} \times 100$$

17. Press the [MODE] button to display "EF CD CHECK" (C15).
18. Press the [⏏ MD] button and take out the check disc (TDYS-1).

Checking Location: BD board (see page 40)

6-7. Focus Bias Check

Change the focus bias and check the focus tolerance amount.

Procedure:

1. Load the test disc (MDW-74/GA-1).
2. Press the [MD ⏮] or [MD ⏭] button to display "CPLAY 2MODE" (C36).
3. Press the [ENTER/START] button to display "CPLAY 2MID".
4. Press the [MODE] button when "C = ▯▯▯▯ AD = ▯▯)" is displayed.
5. Press the [MD ⏮] or [MD ⏭] button to display "FBIAS CHECK" (C16).
6. Press the [ENTER/START] button to display "▯▯▯▯/▯▯ c = ▯▯".
   The first four digits indicate the C error rate, the two digits after [/] indicate ADER, and the 2 digits after [c =] indicate the focus bias value.
7. Press the [ENTER/START] button to display "▯▯▯▯/▯▯ b = ▯▯".
   Check that the C error is about 220 and ADER is below 2.
8. Press the [ENTER/START] button to display "▯▯▯▯/▯▯ a = ▯▯".
   Check that the C error is about 220 and ADER is below 2.
9. Press the [MODE] button, then press the [⏏ MD] button and take out the test disc.

6-8. C Play Check

MO Error Rate Check

Procedure:

1. Load the test disc (MDW-74/GA-1).
2. Press the [MD ⏮] or [MD ⏭] button to display "CPLAY 2MODE" (C36).
3. Press the [ENTER/START] button to display "CPLAY 2MID".
4. The display changes to "C = ▯▯▯▯ AD = ▯▯)".
5. If the C error rate is below 20, check that ADER is 00.
6. Press the [MODE] button to stop playback, then press the [⏏ MD] button and take out the test disc.

CD Error Rate Check

Procedure:

1. Load the check disc (TDYS-1).
2. Press the [MD ⏮] or [MD ⏭] button to display "CPLAY 2MODE" (C36).
3. Press the [ENTER/START] button to display "CPLAY 2MID".
4. The display changes to "C = ▯▯▯▯ AD = ▯▯)".
5. Check that the C error rate is below 20.
6. Press the [MODE] button to stop playback, then press the [⏏ MD] button and take out the check disc.

6-9. Self-Recording/playback Check

Prepare a continuous recording disc using the unit to be repaired and check the error rate.

Procedure:

1. Load a recordable disc (blank disc).
2. Press the [MD ⏮] or [MD ⏭] button to display "CREC 2MODE" (C37).
3. Press the [ENTER/START] button to display "CREC 2MID".
4. When recording starts, lights up "REC" and display "CREC 2 (@@@@)" (@@@@ is the address).
5. About 1 minute later, press the [MODE] button to stop continuous recording.
6. Press the [MD ⏮] or [MD ⏭] button to display "CPLAY 2 MODE" (C36).
7. Press the [ENTER/START] button to display "CPLAY 2MID".
8. "C = ▯▯▯▯ AD = ▯▯)" will be displayed.
9. Check that the C error becomes below 20 and the AD error below 2.
10. Press the [MODE] button to stop playback, then press the [⏏ MD] button and take out the disc.

7. Initial Setting of Adjustment Value

Note:

Mode which sets the adjustment results recorded in the non-volatile memory to the initial setting value. However the results of the temperature compensation offset adjustment will not change to the initial setting value.

If initial setting is performed, perform all adjustments again excluding the temperature compensation offset adjustment.

For details of the initial setting, refer to "4. Precautions for Adjustments" (See page 32) and execute the initial setting before the adjustment as required.

Procedure:

1. Press the MD ⏮ or MD ⏭ button to display "ADJ CLEAR" (C28).
2. Press the ENTER/START button. "Complete!" will be displayed momentarily and initial setting will be executed, after which "ADJ CLEAR" (C28) will be displayed.

8. Recording and Displaying the Iop Information

The Iop data can be recorded in the non-volatile memory. The Iop value on the optical pick-up label and the Iop value after the adjustment will be recorded. Recording these data eliminates the need to read the label on the optical pick-up.

Recording Procedure:

1. Press the MD ⏮ or MD ⏭ button to display "Iop Write" (C05), and press the ENTER/START button.
2. The display becomes "Ref=@@@.@" (@ is an arbitrary number) and the numbers which can be changed will blink.
3. Input the Iop value on the optical pick-up label.
   To select the number: Press the MD ⏮ or MD ⏭ button.
   To select the digit : Press the TAPE REC button.
4. When the ENTER/START button is pressed, the display becomes "Measu=@@@.@" (@ is an arbitrary number).
5. As the adjustment results are recorded for the step 4 value. Leave it as it is and press the ENTER/START button.
6. "Complete!!" will be displayed momentarily. The value will be recorded in the non-volatile memory and the display will become "Iop Write" (C05).

Display Procedure:

1. Press the MD ⏮ or MD ⏭ button to display "Iop Read"(C26).
2. Press the ENTER/START button.
3. "@@.@/##.#" is displayed and the recorded contents are displayed.
   @@.@ indicates the Iop value on the optical pick-up label.
   ##.# indicates the Iop value after adjustment.

9. Temperature Compensation Offset Adjustment

Save the temperature data at that time in the non-volatile memory as 25 ˚C reference data.

Note:

1. Usually, do not perform this adjustment.
2. Perform this adjustment in an ambient temperature of 22 ˚C to 28 ˚C. Perform it immediately after the power is turned on when the internal temperature of the unit is the same as the ambient temperature of 22 ˚C to 28 ˚C.
3. When D101 has been replaced, perform this adjustment after the temperature of this part has become the ambient temperature.

Procedure:

1. Press the MD ⏮ or MD ⏭ button to display "TEMP ADJUST" (C03).
2. Press the ENTER/START button to select the "TEMP ADJUST" mode.
3. "TEMP = ⬚⬚ [OK]" and the current temperature data will be displayed.
4. To save the data, press the ENTER/START button.
   When not saving the data, press the MODE button.
5. When the ENTER/START button is pressed, "TEMP = ⬚⬚ SAVE" will be displayed and turned back to "TEMP ADJUST" (C03) display then.
   When the MODE button is pushed, it returns to the display of "TEMP ADJUST" (C03) immediately.

Specified Value:

The "TEMP = ⬚⬚" should be within "E0 - EF", "F0 - FF", "00 - 0F", "10 - 1F" and "20 - 2F".

10. Laser Power Adjustment

Before starting adjustment:

The adjustment value differs depending on the types (KMS-262A or KMS-262E) of optical pickup. Be sure to confirm the type name before starting adjustment.

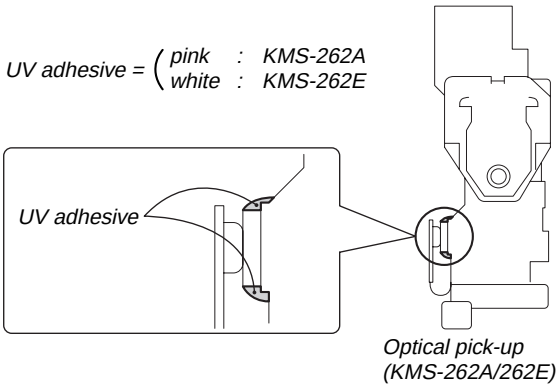

Check the Iop value of the optical pick-up before adjustments. (Refer to 8. Recording and Displaying the Iop Information)

Connection:

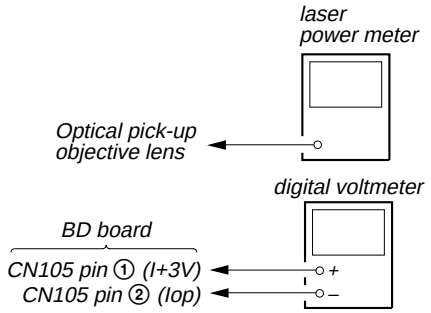

Procedure:

1. Insert the laser power meter probe into the disk insertion slot and set it on top of the objective lens of the optical pick-up. (When it cannot be set properly, press the TAPE ◀◀ button or TAPE ▶▶ button to move the optical pick-up)
   Connect the digital voltmeter to CN105 pin ① (I+3V) and CN105pin ② (Iop) on the BD board.
2. Press the MD ⏮ or MD ⏭ button to display "LDPWR ADJUST" (C04).
   (Laser power : For adjustment)
3. Press the ENTER/START button once to display "L 0.93 mW $ ⬚⬚".
4. Press the MD ⏮ or MD ⏭ button until the laser power meter reading matches with the specified value.
   Press the ENTER/START button after setting the range knob of the laser power meter to 10mW, and save the adjustment results. ("L SAVE $ ⬚⬚" will be displayed for a moment)

Specified Value:

KMS-262A	0.85 to 0.91mW
KMS-262E	0.90 to 0.95mW

5. Then "L 8.65 mW $ ⬚⬚" will be displayed.

6. Press the MD ⏮ or MD ⏭ button so that the reading of the laser power meter becomes the specified value, press the ENTER/START button to save it.

Note: Do not perform the emission with 8.65mW more than 15 seconds continuously.

Specified Value:

KMS-262A	8.2 to 8.6mW
KMS-262E	8.5 to 8.8mW

7. Then,press the MD ⏮ or MD ⏭ button to display "LDPWR CHECK" (C13).
8. Press the ENTER/START button once to display "L 0.93mW$ ". Check that the reading of the laser power meter matches with the specified value.

Specified Value:

KMS-262A	0.84 to 0.92mW
KMS-262E	0.90 to 0.96mW

9. Press the ENTER/START button once more to display "L 8.65mW$ ". Check that the reading the laser power meter and digital voltmeter satisfy the specified value.
   Note down the digital voltmeter reading value.

Specified Value:

Laser power meter reading :
8.10 to 8.70mW (KMS-262A)
8.40 to 8.90mW (KMS-262E)

Digital voltmeter reading : Value on the optical pick-up label ±10%

(Optical pick-up label)

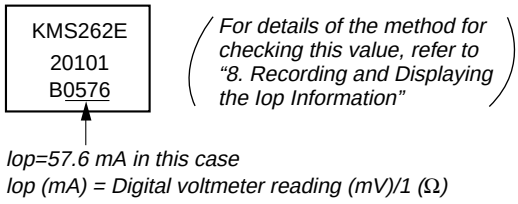

10. Press the MODE button to display "LDPWR CHECK" (C13) and stop the laser emission.
    (The MODE button is effective at all times to stop the laser emission)
11. Press the MD ⏮ or MD ⏭ button to display "Iop Write" (C05).
12. Press the ENTER/START button. When the display becomes Ref=@@@.@ (@ is an arbitrary number), press the ENTER/START button to display "Measu=@@@.@" (@ is an arbitrary number).
13. The numbers which can be changed will blink. Input the Iop value noted down at step 9.
    To select the number : Press the MD ⏮ or MD ⏭ button.
    To select the digit : Press the TAPE REC button.
14. When the ENTER/START button is pressed, "Complete!" will be displayed momentarily. The value will be recorded in the non-volatile memory and the display will become "Iop Write" (C05).

Note: After step 9, each time the ENTER/START button is pressed, the display will be switched to "L 0.73mW$ ", "L 7.70mW$ " "L WPホセイ$ " Nothing needs to be performed here.

11. Iop NV Save

Write the reference values in the nonvolatile memory to perform "Iop compare". As this involves rewriting the reference values, do not perform this procedure except when adjusting the laser power during replacement of the optical pick-up and when replacing the IC102. Otherwise the optical pick-up check may deteriorate.

Note: Perform this function with the optical pick-up set at room temperature.

Procedure:

1. Press the MD ⏮ or MD ⏭ button to display "Iop NV Save" (C06).
2. Press the ENTER/START button and display "Iop [stop]".
3. After the display changes to "Iop = save?", press the ENTER/START button.
4. After "Complete!" is displayed momentarily, the display changes to "Iop 8.4 mW".
5. After the display changes to "Iop= save?", press the ENTER/START button.
6. When "Complete!" is displayed, it means that Iop NV saving has been completed.

12. Traverse Adjustment

Note 1: Data will be erased during MO reading if a recorded disc is used in this adjustment.

Note 2: If the traverse waveform is not clear, connect the oscilloscope as shown in the following figure so that it can be seen more clearly.

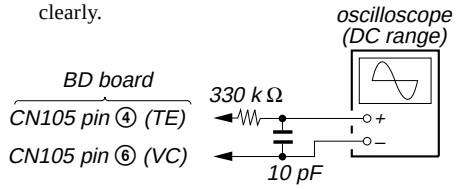

Connection:

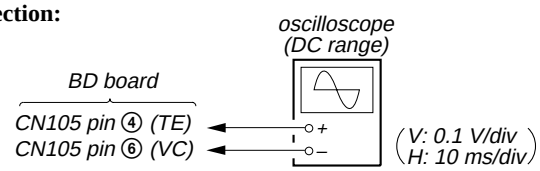

Procedure:

1. Connect an oscilloscope to CN105 pin ④ (TE) and CN105 pin ⑥ (VC) on the BD board.
2. Load a disc (any available on the market). (Refer to Note 1)
3. Press the TAPE ⏩ button to move the optical pick-up outside the pit.
4. Press the MD ⏮ or MD ⏭ button to display "EF MO ADJUST" (C07).
5. Press the ENTER/START button to display "EFB = MO-R". (Laser power READ power/Focus servo ON/tracking servo OFF/ spindle (S) servo ON)
6. Press the MD ⏮ or MD ⏭ button so that the waveform of the oscilloscope becomes the specified value.
   (When the MD ⏮ or MD ⏭ button is pressed, the of "EFB= " changes and the waveform changes) In this adjustment, waveform varies at intervals of approx. 2%. Adjust the waveform so that the specified value is satisfied as much as possible.
   (Read power traverse adjustment)

Traverse Waveform

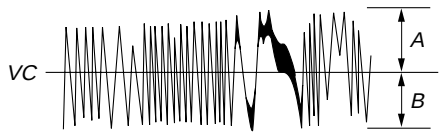

Specification A = B

7. Press the ENTER/START button and save the result of adjustment to the non-volatile memory ("EFB = SAVE" will be displayed for a moment. Then "EFB = MO-W" will be displayed).

8. Press the MD ⏮ or MD ⏭ button so that the waveform of the oscilloscope becomes the specified value.
   (When the MD ⏮ or MD ⏭ button is pressed, the ⬚⬚ of "EFB= ⬚⬚" changes and the waveform changes) In this adjustment, waveform varies at intervals of approx. 2%. Adjust the waveform so that the specified value is satisfied as much as possible.
   (Write power traverse adjustment)

Traverse Waveform

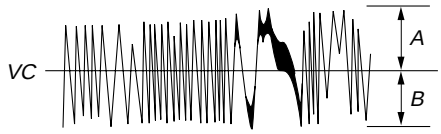

Specification A = B

9. Press the ENTER/START button, and save the adjustment results in the non-volatile memory. ("EFB = ⬚⬚ SAVE" will be displayed for a moment)
10. "EFB = ⬚⬚ MO-P" will be displayed.
    The optical pick-up moves to the pit area automatically and servo is imposed.
11. Press the MD ⏮ or MD ⏭ button until the waveform of the oscilloscope moves closer to the specified value.
    In this adjustment, waveform varies at intervals of approx. 2%. Adjust the waveform so that the specified value is satisfied as much as possible.

Traverse Waveform

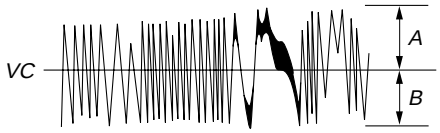

Specification A = B

12. Press the ENTER/START button, and save the adjustment results in the non-volatile memory. ("EFB = ⬚⬚ SAVE" will be displayed for a moment)
    Next "EF MO ADJUST" (C07) is displayed. The disc stops rotating automatically.
13. Press the ⏏ MD button and take out the disc.
14. Load the check disc (TDYS-1).
15. Press the MD ⏮ or MD ⏭ button to display "EF CD ADJUST" (C08).
16. Press the ENTER/START button to display "EFB = ⬚⬚ CD". Servo is imposed automatically.
17. Press the MD ⏮ or MD ⏭ button so that the waveform of the oscilloscope moves closer to the specified value.
    In this adjustment, waveform varies at intervals of approx. 2%. Adjust the waveform so that the specified value is satisfied as much as possible.

Traverse Waveform

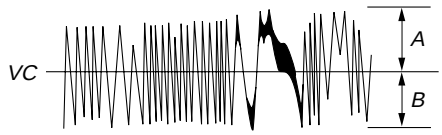

Specification A = B

18. Press the ENTER/START button, display "EFB = ⬚⬚ SAVE" for a moment and save the adjustment results in the non-volatile memory.
    Next "EF CD ADJUST" (C08) will be displayed.
19. Press the ⏏ MD button and take out the check disc.

Adjustment Location: BD board (see page 40)

13. Focus Bias Adjustment

Procedure:

1. Load the test disc (MDW-74/GA-1).
2. Press the MD ⏮ or MD ⏭ button to display "CPLAY2 MODE" (C36).
3. Press the ENTER/START button to display "CPLAY 2MID".
4. Press the MODE button when "C = ⬚⬚⬚⬚ AD = ⬚⬚)" is displayed.
5. Press the MD ⏮ or MD ⏭ button to display "FBIAS ADJUST" (C09).
6. Press the ENTER/START button to display "⬚⬚⬚⬚/⬚⬚ a = ⬚⬚ T".
   The first four digits indicate the C error rate, the two digits after "/ " indicate ADER, and the 2 digits after "a =" indicate the focus bias value.
7. Press the MD ⏭ button and find the focus bias value at which the C error rate becomes about 200 (refer to Note 2).
8. Press the ENTER/START button to display "⬚⬚⬚⬚/⬚⬚ b = ⬚⬚ T".
9. Press the MD ⏮ button and find the focus bias value at which the C error rate becomes about 200.
10. Press the ENTER/START button to display "⬚⬚⬚⬚/⬚⬚ c = ⬚⬚ T".
11. Check that the C error rate is below 20 and ADER is 00. Then press the ENTER/START button.
12. If the "(⬚⬚)" in "⬚⬚ - ⬚⬚ - ⬚⬚ (⬚⬚)" is above 20, press the ENTER/START button.
    If below 20, press the MODE button and repeat the adjustment from step 2.
13. Press thet ⏏ MD button and take out the disc.

Note 1: The relation between the C error and focus bias is as shown in the following figure. Find points A and B in the following figure using the above adjustment. The focal point position C is automatically calculated from points A and B.

Note 2: As the C error rate changes, perform the adjustment using the average value.

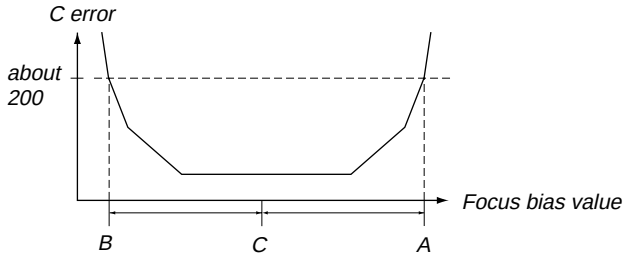

14. Error Rate Check

14-1. CD Error Rate Check

Procedure:

1. Load the check disc (TDYS-1).
2. Press the [MD ⏮] or [MD ⏭] button and display "CPLAY2 MODE" (C36).
3. Press the [ENTER/START] button and display "CPLAY2 MID".
4. The display changes to "C = □□□□ AD = □□)".
5. Check that the C error rate is below 20.
6. Press the [MODE] button to stop playback, then press the [⏏ MD] button and take out the check disc.

14-2. MO Error Rate Check

Procedure:

1. Load the continuously-recorded disc. (Refer to "5. Using The Continuously Recorded Disc" (See page 33))
2. Press the [MD ⏮] or [MD ⏭] button to display "CPLAY2 MODE" (C36).
3. Press the [ENTER/START] button to display "CPLAY2MID".
4. The display changes to "C = □□□□ AD = □□)".
5. If the C error rate is below 20, check that ADER is 00.
6. Press the [MODE] button to stop playback, then press the [⏏ MD] button and take out the disc.

15. Focus Bias Check

Change the focus bias and check the focus tolerance amount.

Procedure:

1. Load the continuously-recorded disc. (Refer to "5. Using The Continuously Recorded Disc" (See page 33))
2. Press the [MD ⏮] or [MD ⏭] button to display "CPLAY2 MODE" (C36).
3. Press the [ENTER/START] button to display "CPLAY2 MID".
4. Press the [MODE] button when "C = □□□□ AD = □□)" is displayed.
5. Press the [MD ⏮] or [MD ⏭] button to display "FBIAS CHECK" (C16).
6. Press the [ENTER/START] button to display "□□□□/□□ c = □□".
   The first four digits indicate the C error rate, the two digits after "/ " indicate ADER, and the 2 digits after "c =" indicate the focus bias value.
7. Press the [ENTER/START] button and display "□□□□/□□ b = □□".
   Check that the C error is below 220 and ADER is below 2.
8. Press the [ENTER/START] button and display "□□□□/□□ a = □□".
   Check that the C error is below 220 and ADER is below 2
9. Press the [MODE] button, then press the [⏏ MD] button and take out the disc.

Note: If the C error and ADER are above other than the specified value at points a (step 8. in the above) or b (step 7. in the above), the focus bias adjustment may not have been carried out properly. Adjust perform the beginning again.

16. Auto Gain Control Output Level Adjustment

Be sure to perform this adjustment when the optical pick-up is replaced.

If the adjustment results becomes "Adjust NG!", the optical pick-up may be faulty or the servo system circuits may be abnormal.

16-1. CD Auto Gain Control Output Level Adjustment

Procedure:

1. Load the check disc (TDYS-1).
2. Press the [MD ⏮] or [MD ⏭] button to display "AG Set (CD)" (C11).
3. When the [ENTER/START] button is pressed, the adjustment will be performed automatically.
   "Complete!" will then be displayed momentarily when the value is recorded in the non-volatile memory, after which the display changes to "AG Set (CD)" (C11).
4. Press the [⏏ MD] button and take out the check disc.

16-2. MO Auto Gain Control Output Level Adjustment

Procedure:

1. Load the test disc (MDW-74/GA-1).
2. Press the [MD ⏮] or [MD ⏭] button to display "AG Set (MO)" (C10).
3. When the [ENTER/START] button is pressed, the adjustment will be performed automatically.
   "Complete!" will then be displayed momentarily when the value is recorded in the non-volatile memory, after which the display changes to "AG Set (MO)" (C10).
4. Press the [⏏ MD] button and take out the test disc.

Adjustment and checking Loacation:

— BD BOARD (Side A) —

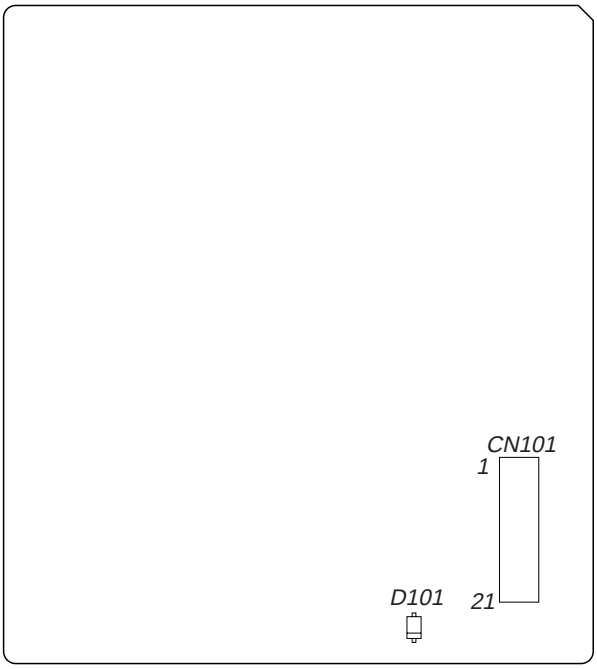

— BD BOARD (Side B) —

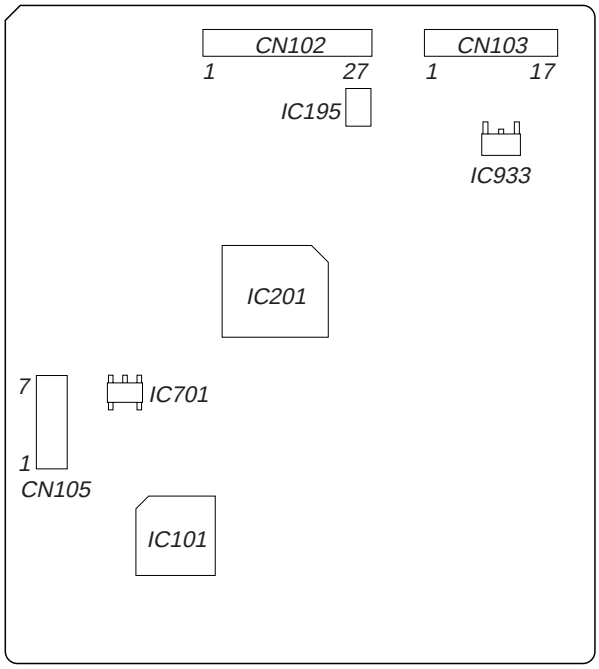

Note: If is useful to use the jig for checking the waveform. (Refer to Servicing Notes on page 11).

SECTION 7
DIAGRAMS

• Circuit Boards Location

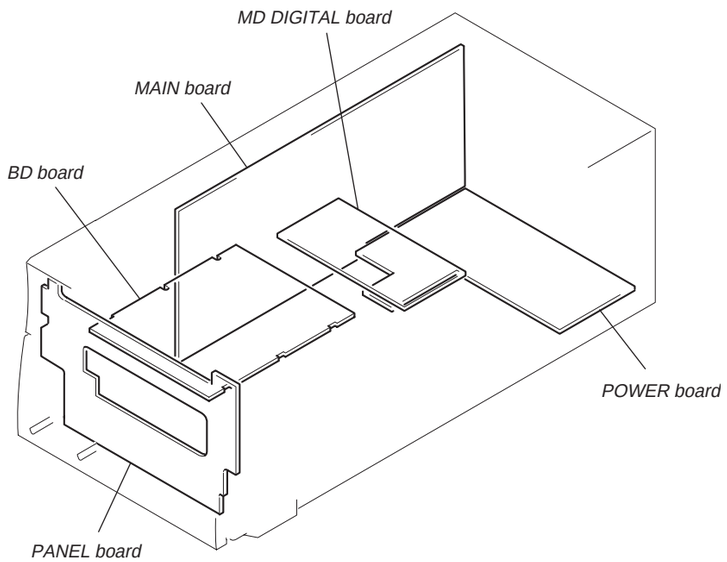

• Waveforms

BD Board

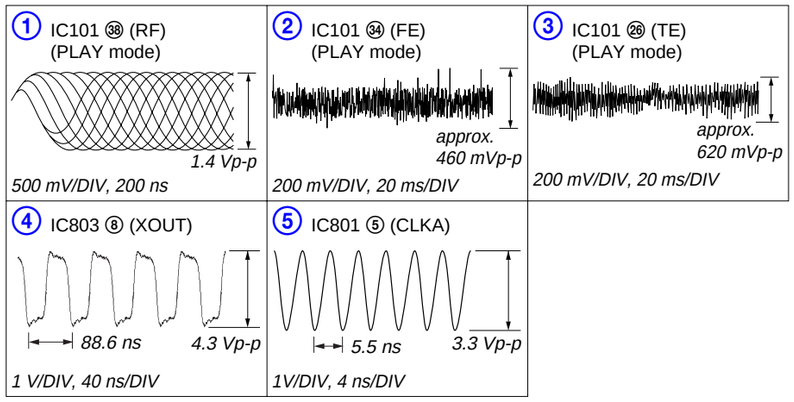

MAIN Board

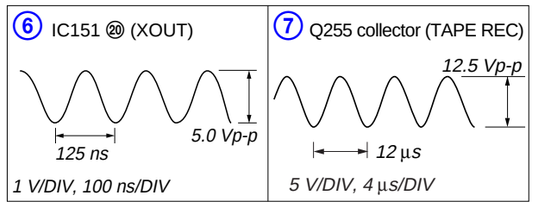

MD DIGITAL Board

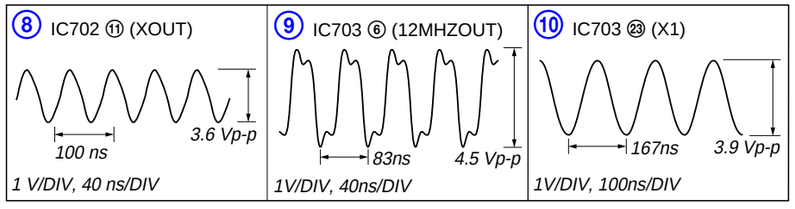

THIS NOTE IS COMMON FOR PRINTED WIRING BOARDS AND SCHEMATIC DIAGRAMS.
(In addition to this, the necessary note is printed in each block.)

For schematic diagrams.

Note:
- All capacitors are in µF unless otherwise noted. pF: µµF 50 WV or less are not indicated except for electrolytics and tantalums.
- All resistors are in Ω and 1/4 W or less unless otherwise specified.
- △ : internal component.
- : fusible resistor.
- : panel designation.

Note: The components identified by mark ⚠ or dotted line with mark ⚠ are critical for safety.
Replace only with part number specified.

☆ IC195 is a written in and settled EEPROM. Supply with a single article has not been carried out. In case you exchange by BD board (A-4731-095-A), please put on IC195 currently used with the model again.

- : B+ Line.
- : B– Line.
- : adjustment for repair.
- Voltages and waveforms are dc with respect to ground under no-signal (detuned) conditions.
- Voltages are taken with a VOM (Input impedance 10 MΩ). Voltage variations may be noted due to normal production tolerances.
  BD board
  no mark : MD stop
  ( ) : MD playback
  MD DIGITAL board
  no mark : MD stop
  Other boards
  no mark : FM
- Waveforms are taken with a oscilloscope.
  Voltage variations may be noted due to normal production tolerances.
- Circled numbers refer to waveforms.

- Signal path.
  - : DIGITAL IN
  - : DIGITAL OUT
  - : PB (TAPE)
  - : REC (TAPE)
  - : PB (MD)
  - : REC (MD)
  - : USB

For printed wiring boards.

Note:
- : parts extracted from the component side.
- : parts extracted from the conductor side.
- ○ : Through hole.
- : Pattern from the side which enables seeing.

Caution:

Pattern face side: (SIDE B)	Parts on the pattern face side seen from the pattern face are indicated.
Parts face side: (SIDE A)	Parts on the parts face side seen from the parts face are indicated.

• Indication of transistor

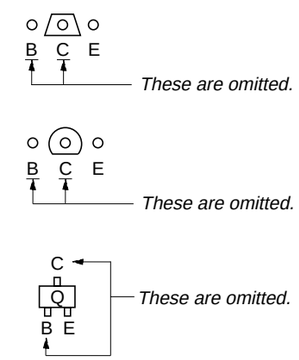

41

7-1. BLOCK DIAGRAMS
– MAIN SECTION –

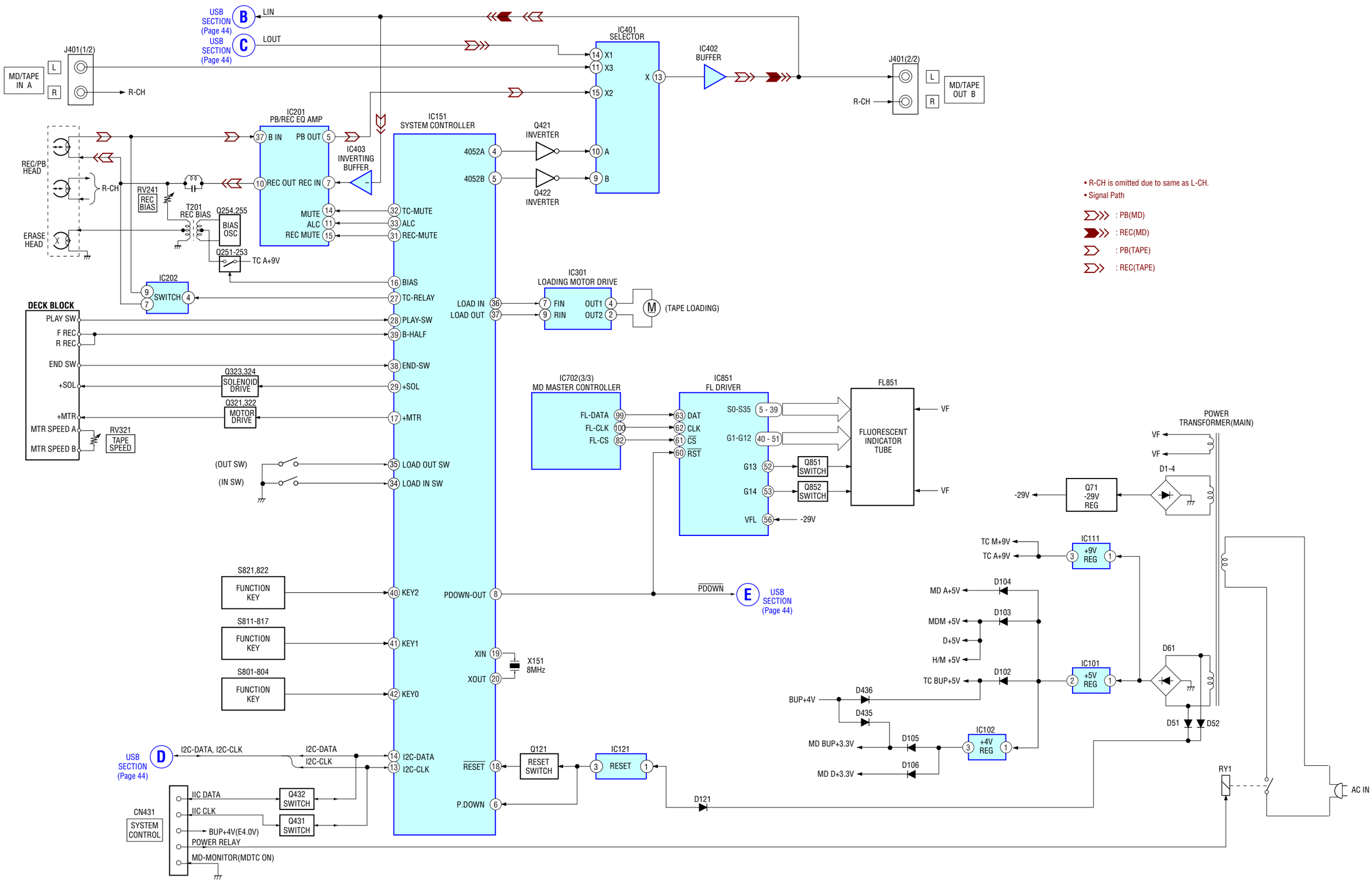

• R-CH is omitted due to same as L-CH.
• Signal Path

: PB(MD)
: REC(MD)
: PB(TAPE)
: REC(TAPE)

– MD SECTION –

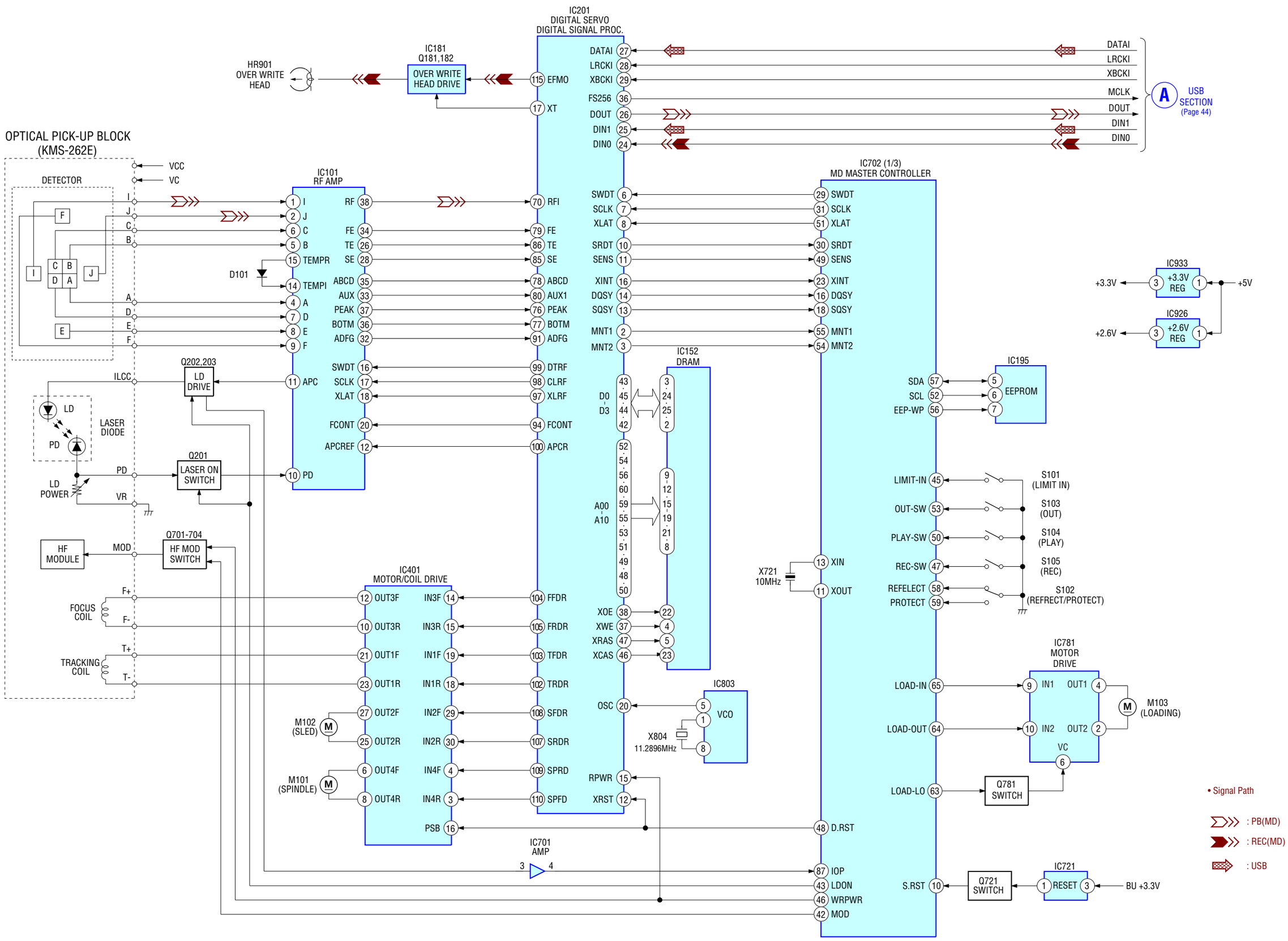
IC201
DIGITAL SERVO
DIGITAL SIGNAL PROC.
HR901
OVER WRITE
HEAD
IC181
Q181,182
OVER WRITE
HEAD DRIVE
EFMO
XT
DATAI
LRCKI
XBCKI
MCLK
DOUT
DIN1
DIN0
A
USB
SECTION
(Page 44)
OPTICAL PICK-UP BLOCK
(KMS-262E)
VCC
VC
DETECTOR
IC101
RF AMP
RF
FE
TE
SE
TEMPR
TEMPI
ABCD
AUX
PEAK
BOTM
ADFG
SWDT
SCLK
XLAT
FCONT
APCREF
APC
PD
D101
RFI
DTRF
CLRF
XLRF
IC702 (1/3)
MD MASTER CONTROLLER
SRDT
SENS
XINT
DQSY
SQSY
MNT1
MNT2
IC933
+3.3V
REG
+5V
IC926
+2.6V
REG
IC152
DRAM
D0
D3
A00
A10
XOE
XWE
XRAS
XCAS
IC195
EEPROM
SDA
SCL
EEP-WP
ILCC
Q202,203
LD
DRIVE
LD
LASER
DIODE
PD
LD
POWER
VR
Q201
LASER ON
SWITCH
HF
MODULE
MOD
Q701-704
HF MOD
SWITCH
LIMIT-IN
OUT-SW
PLAY-SW
REC-SW
REFELECT
PROTECT
S101
(LIMIT IN)
S103
(OUT)
S104
(PLAY)
S105
(REC)
S102
(REFRECT/PROTECT)
X721
10MHz
XIN
XOUT
IC401
MOTOR/COIL DRIVE
FOCUS
COIL
TRACKING
COIL
FFDR
FRDR
TFDR
TRDR
SFDR
SRDR
SPRD
SPFD
OUT3F
OUT3R
OUT1F
OUT1R
OUT2F
OUT2R
OUT4F
OUT4R
IN3F
IN3R
IN1F
IN1R
IN2F
IN2R
IN4F
IN4R
M102
(SLED)
M101
(SPINDLE)
IC803
VCO
X804
11.2896MHz
OSC
RPWR
XRST
PSB
IC781
MOTOR
DRIVE
LOAD-IN
LOAD-OUT
LOAD-LO
IN1
OUT1
IN2
OUT2
VC
M103
(LOADING)
Q781
SWITCH
IC701
AMP
IOP
LDON
WRPWR
MOD
D.RST
S.RST
Q721
SWITCH
IC721
RESET
BU +3.3V
• Signal Path
: PB(MD)
: REC(MD)
: USB

– USB SECTION –

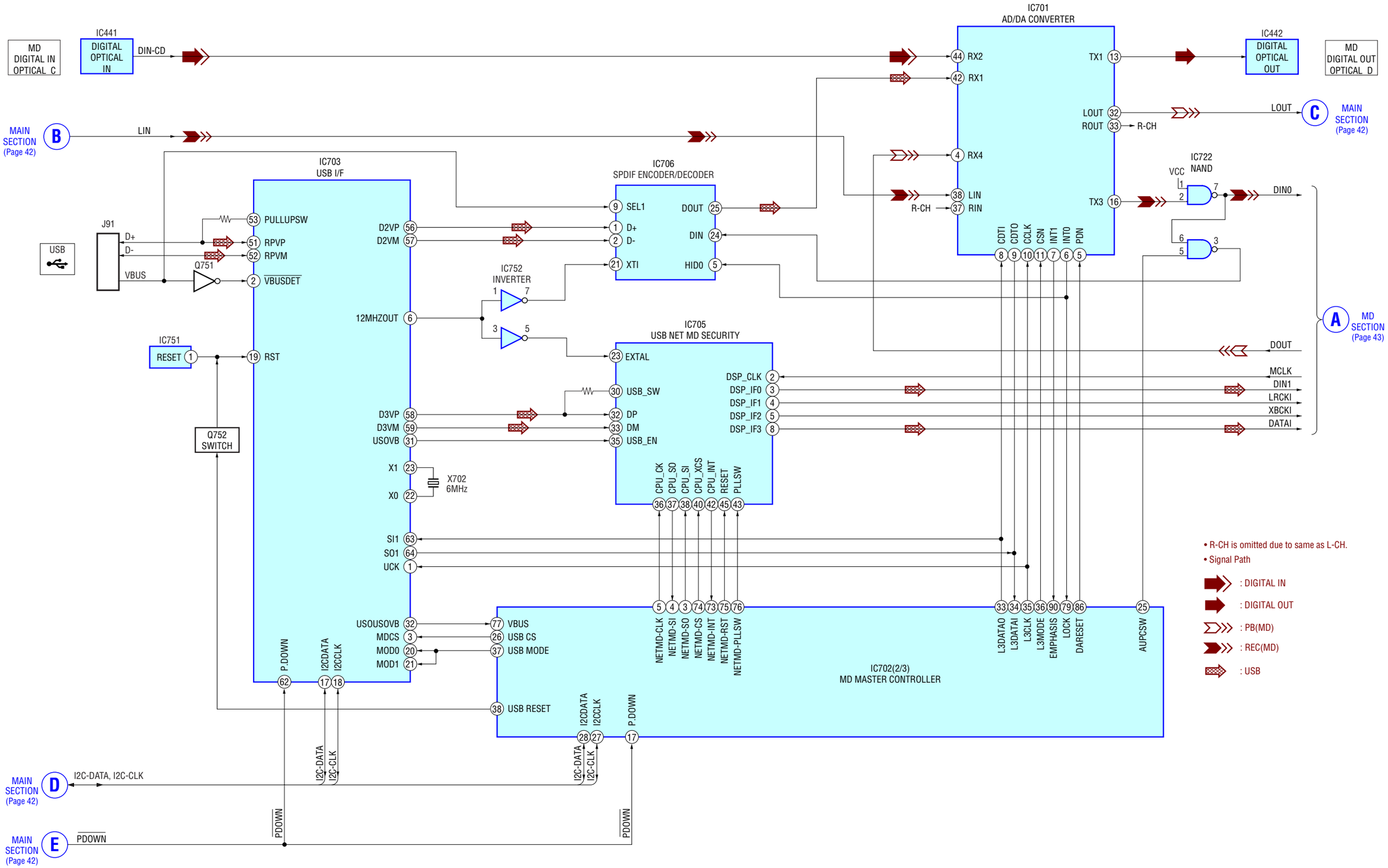
MD DIGITAL IN OPTICAL_C
IC441 DIGITAL OPTICAL IN
DIN-CD
IC701 AD/DA CONVERTER
IC442 DIGITAL OPTICAL OUT
MD DIGITAL OUT OPTICAL_D
MAIN SECTION (Page 42) B
LIN
LOUT
ROUT
R-CH
MAIN SECTION (Page 42) C
IC703 USB I/F
IC706 SPDIF ENCODER/DECODER
IC722 NAND
VCC
DIN0
J91
USB
D+
D-
VBUS
Q751
PULLUPSW
RPVP
RPVM
VBUSDET
D2VP
D2VM
SEL1
DOUT
DIN
HID0
XTI
IC752 INVERTER
12MHZOUT
IC705 USB NET MD SECURITY
EXTAL
USB_SW
DP
DM
USB_EN
DSP_CLK
DSP_IF0
DSP_IF1
DSP_IF2
DSP_IF3
IC751
RESET
RST
Q752 SWITCH
D3VP
D3VM
USOVB
X1
X0
X702 6MHz
CPU_CK
CPU_SO
CPU_SI
CPU_XCS
CPU_INT
RESET
PLLSW
SI1
SO1
UCK
USOUSOVB
MDCS
MOD0
MOD1
VBUS
USB CS
USB MODE
USB RESET
P.DOWN
I2CDATA
I2CCLK
NETMD-CLK
NETMD-SI
NETMD-SO
NETMD-CS
NETMD-INT
NETMD-RST
NETMD-PLLSW
IC702(2/3) MD MASTER CONTROLLER
L3DATAO
L3DATAI
L3CLK
L3MODE
EMPHASIS
LOCK
DARESET
AUPCSW
DOUT
MCLK
DIN1
LRCKI
XBCKI
DATAI
MD SECTION (Page 43) A
I2C-DATA, I2C-CLK
MAIN SECTION (Page 42) D
PDOWN
MAIN SECTION (Page 42) E
• R-CH is omitted due to same as L-CH.
• Signal Path
: DIGITAL IN
: DIGITAL OUT
: PB(MD)
: REC(MD)
: USB

7-2. PRINTED WIRING BOARD – BD BOARD –

• See page 41 for Circuit Boards Location. • : **Uses unleaded solder.**

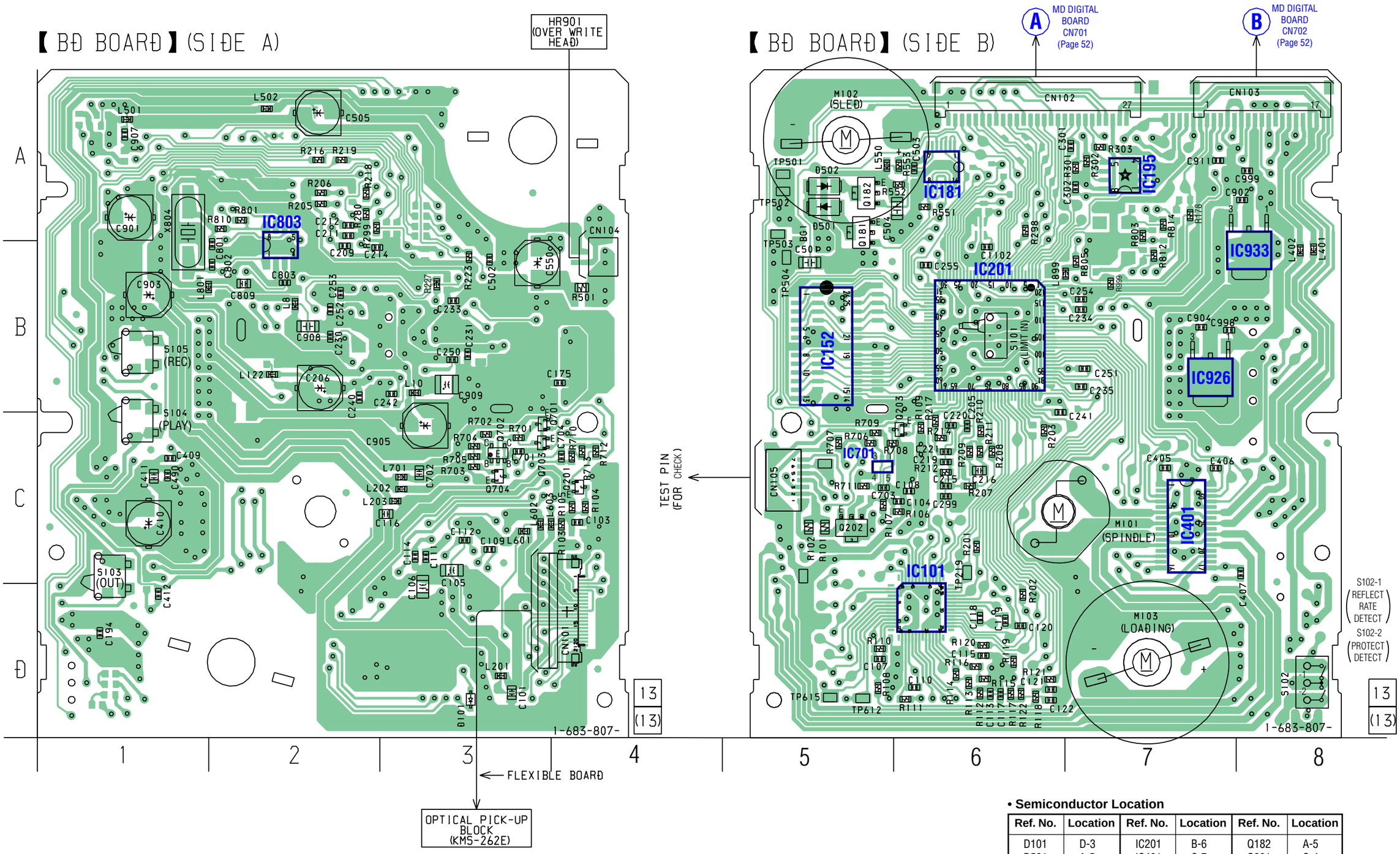

☆ IC195 is a written in and settled EEPROM. Supply with a single article has not been carried out. In case you exchange by BD board (A-4731-095-A), please put on IC195 currently used with the model again.

• **Semiconductor Location**

Ref. No.	Location	Ref. No.	Location	Ref. No.	Location
D101	D-3	IC201	B-6	Q182	A-5
D501	A-5	IC401	C-7	Q201	C-4
D502	A-5	IC701	C-5	Q202	C-5
		IC803	A-2	Q203	C-6
IC101	C-6	IC926	B-7	Q701	C-4
IC152	B-5	IC933	B-7	Q702	C-3
IC181	A-6			Q703	C-3
IC195	A-7	Q181	A-5	Q704	C-3

7-3. SCHEMATIC DIAGRAM – BD BOARD (1/2) –

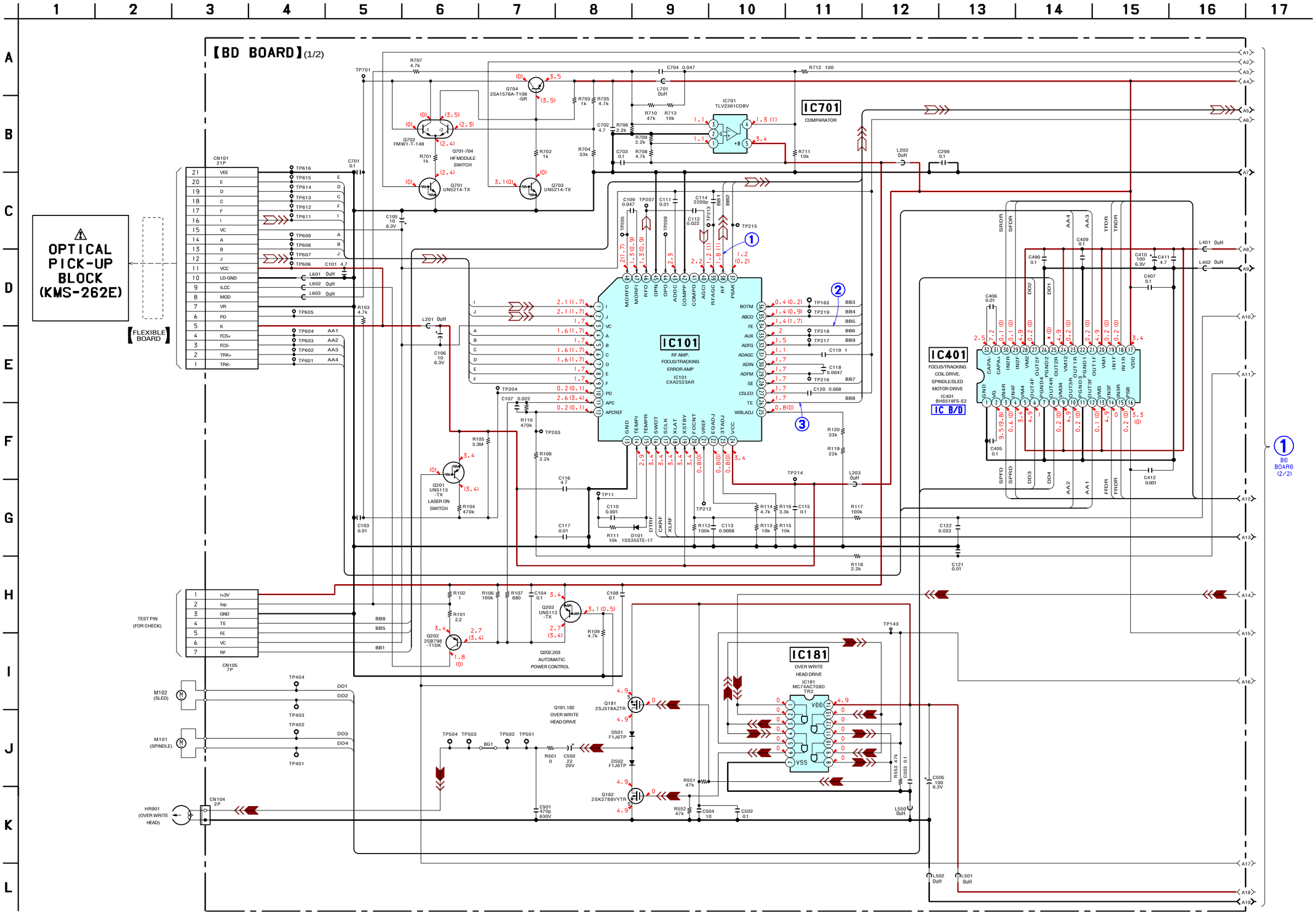

7-4. SCHEMATIC DIAGRAM – BD BOARD (2/2) –

☆ IC195 is a written in and settled EEPROM. Supply with a single article has not been carried out. In case you exchange by BD board (A-4731-095-A), please put on IC195 currently used with the model again.

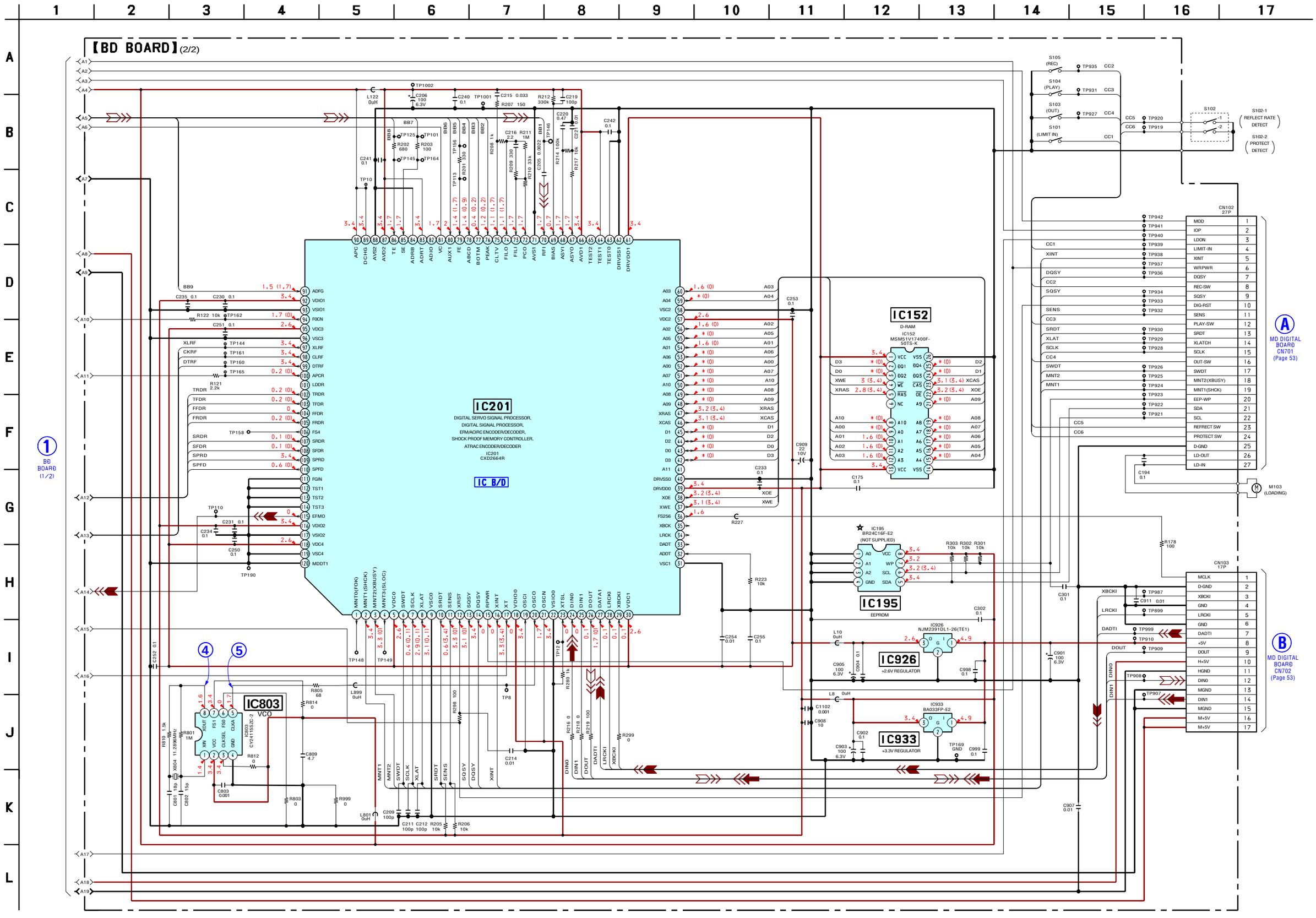

7-5. PRINTED WIRING BOARD – MAIN BOARD (SIDE A) – • See page 41 for Circuit Boards Location. **• : Uses unleaded solder.**

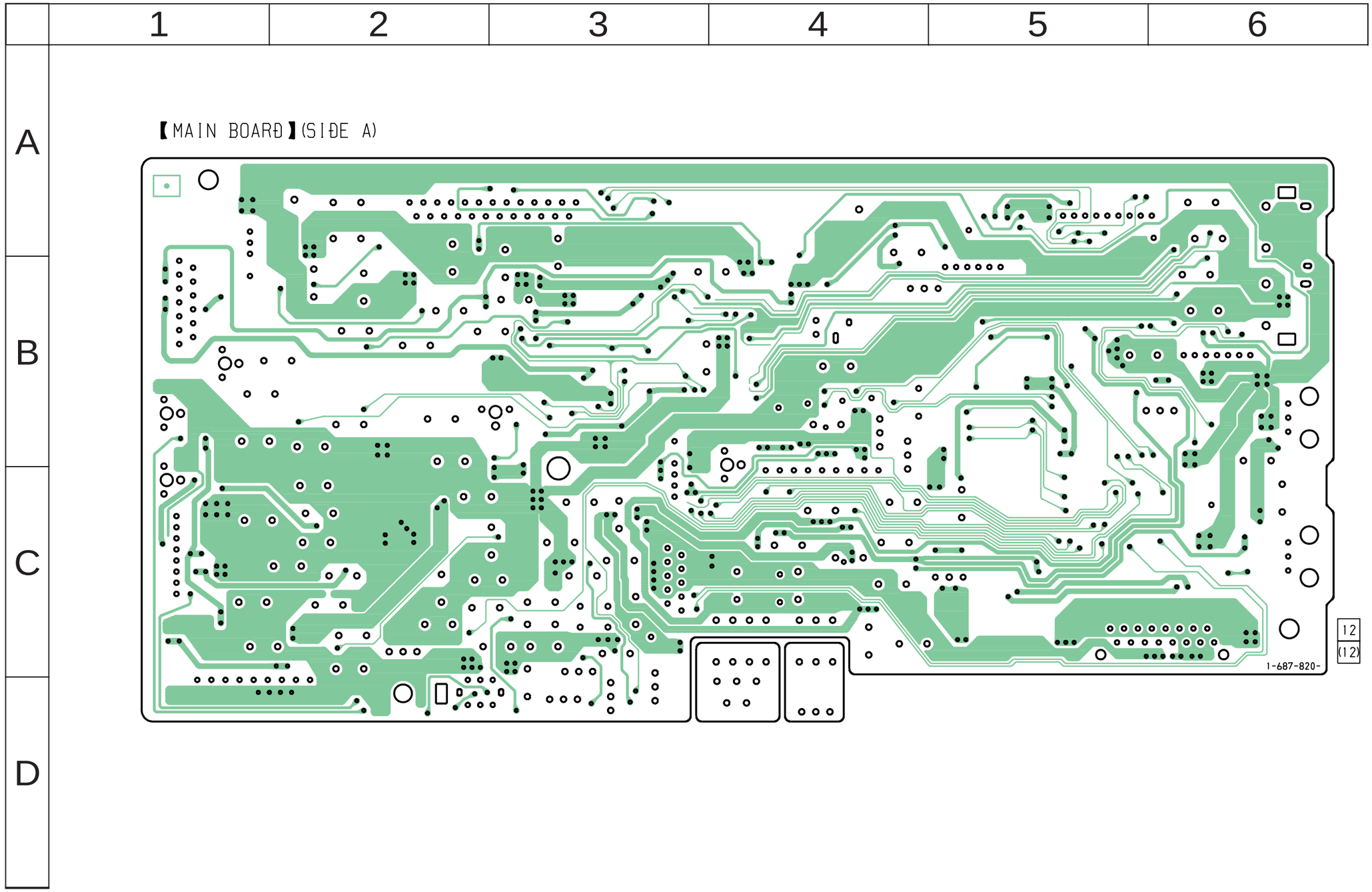

7-6. PRINTED WIRING BOARD – MAIN BOARD (SIDE B) –

• See page 41 for Circuit Boards Location. • : **Uses unleaded solder.**

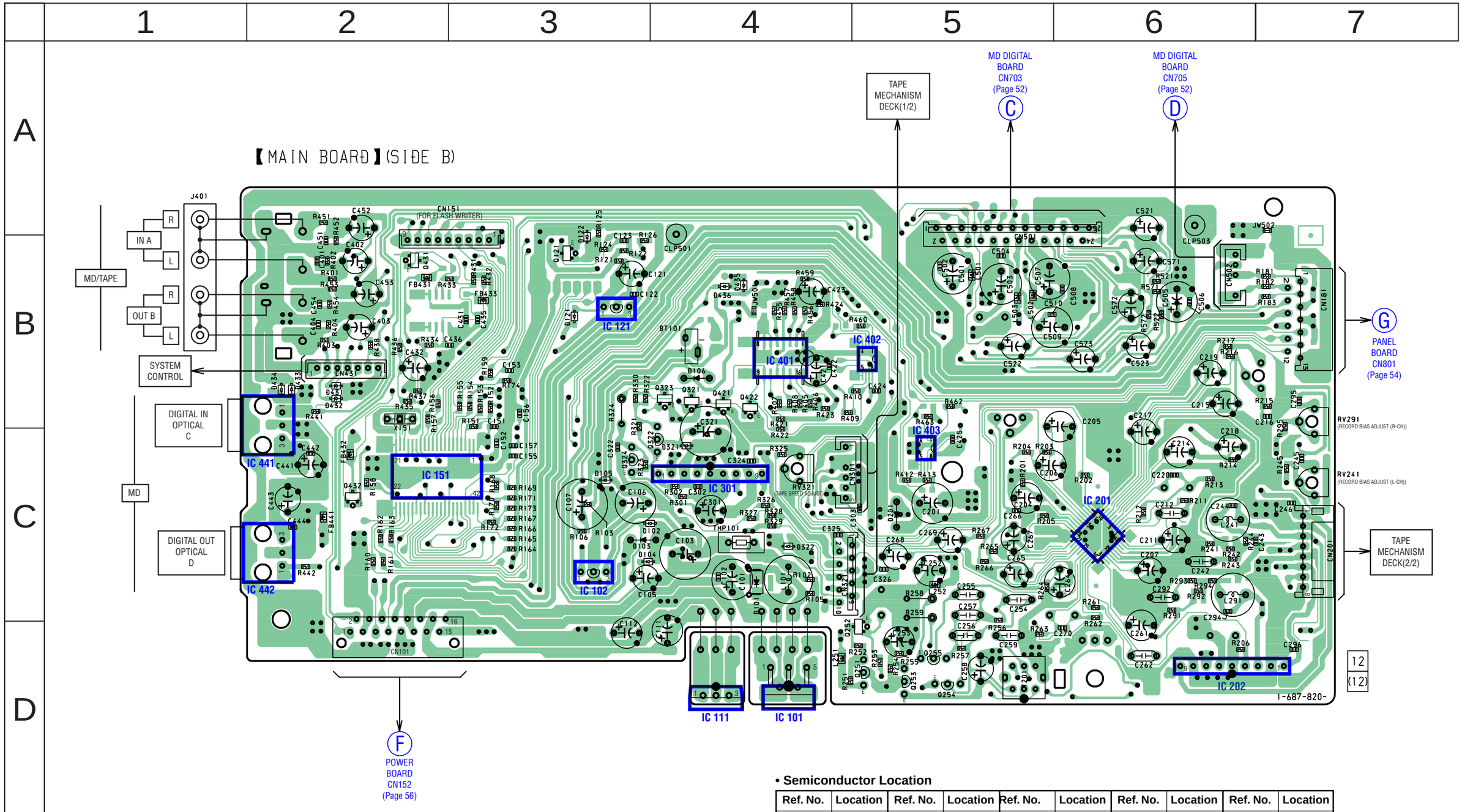

• **Semiconductor Location**

Ref. No.	Location	Ref. No.	Location	Ref. No.	Location	Ref. No.	Location	Ref. No.	Location
D101	C-4	D322	C-4	IC111	D-4	IC442	C-2	Q323	B-4
D102	C-3	D431	B-2	IC121	B-3			Q324	C-3
D103	C-3	D432	B-2	IC151	C-2	Q121	B-3	Q421	B-4
D104	C-3	D433	B-2	IC201	C-6	Q251	D-5	Q422	B-4
D105	C-3	D434	B-2	IC202	D-6	Q252	D-5	Q431	B-2
D106	B-4	D435	B-4	IC301	C-4	Q253	D-5	Q432	C-2
D121	B-3	D436	B-4	IC401	B-4	Q254	D-5		
D122	A-3			IC402	B-5	Q255	D-5		
D201	C-5	IC101	D-4	IC403	B-5	Q321	B-4		
D321	C-4	IC102	C-3	IC441	C-2	Q322	C-4		

7-7. SCHEMATIC DIAGRAM – MAIN BOARD (1/2) –

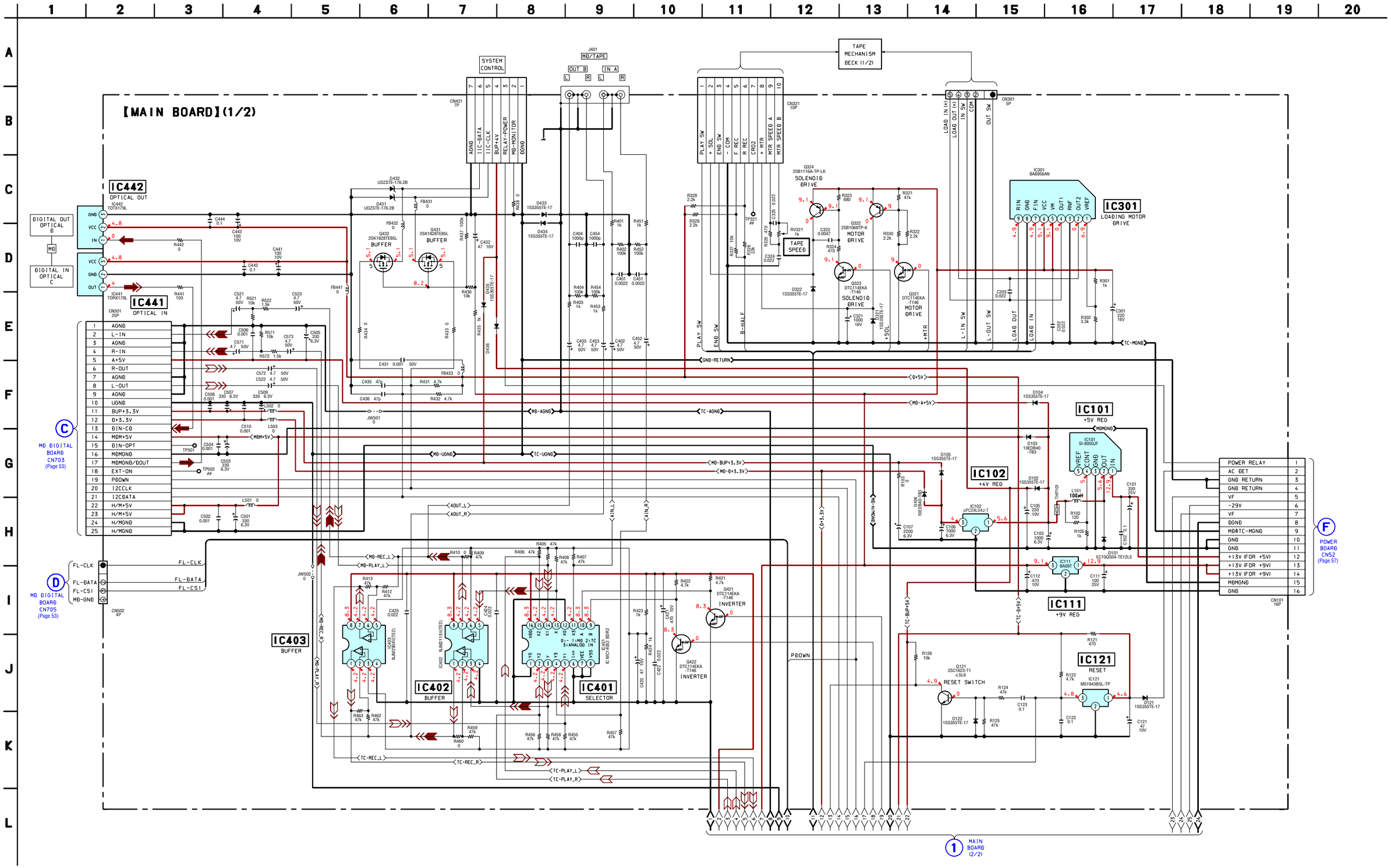

OUTPUT: J

7-8. SCHEMATIC DIAGRAM – MAIN BOARD (2/2) – • See page 61 for IC Pin Function Description.

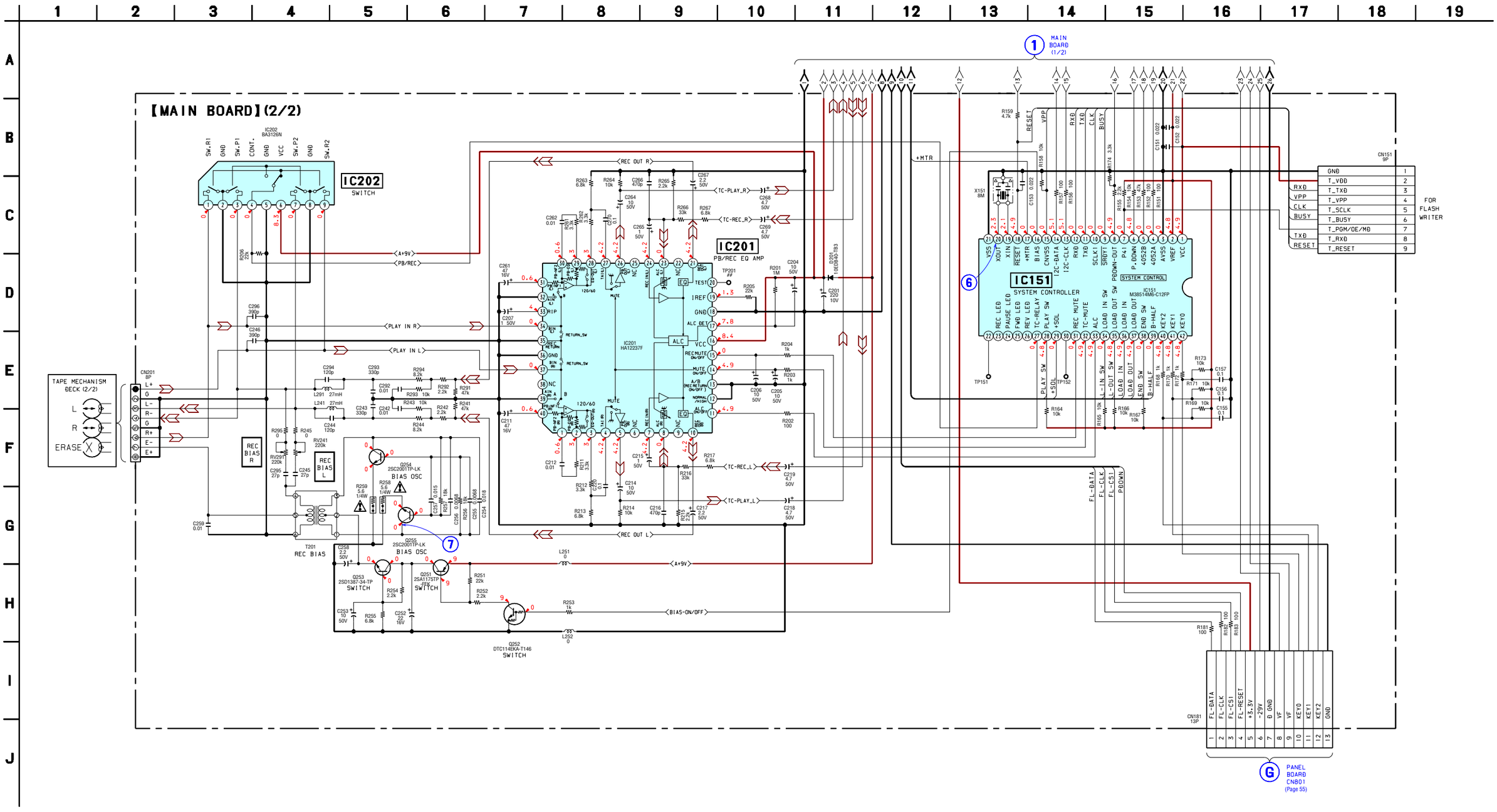

7-9. PRINTED WIRING BOARD – MD DIGITAL BOARD – • See page 41 for Circuit Boards Location. • **: Uses unleaded solder.**

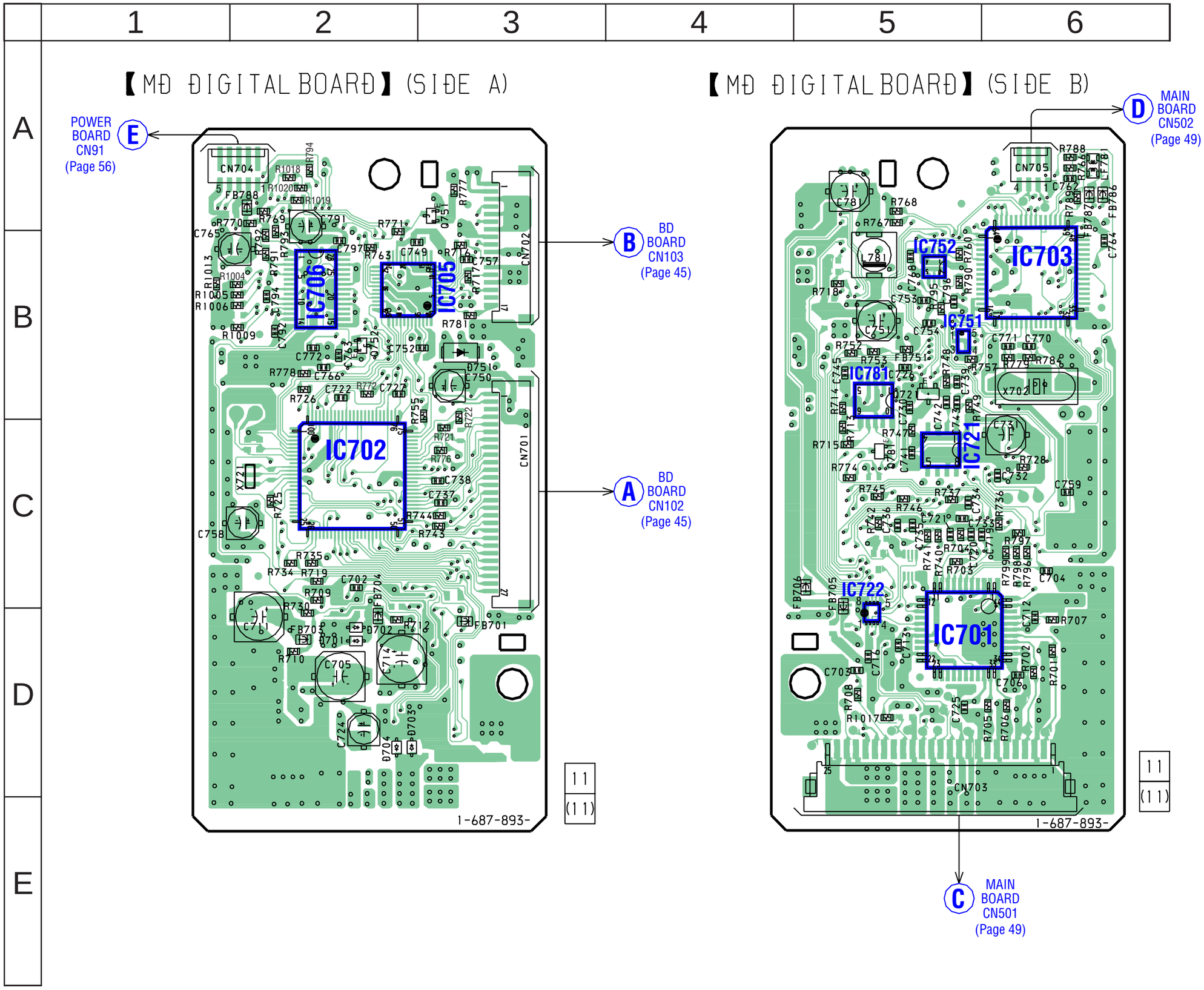

• **Semiconductor Location**

Ref. No.	Location
D701	D-2
D702	D-2
D703	D-2
D704	D-2
D751	B-3
IC701	D-5
IC702	C-2
IC703	B-6
IC705	B-3
IC706	B-2
IC721	C-5
IC722	C-5
IC751	B-5
IC752	B-5
IC781	B-5
Q721	B-5
Q751	A-3
Q752	B-2
Q781	C-5

7-10. SCHEMATIC DIAGRAM – MD DIGITAL BOARD –

• See page 62, 63 for IC Pin Function Description.

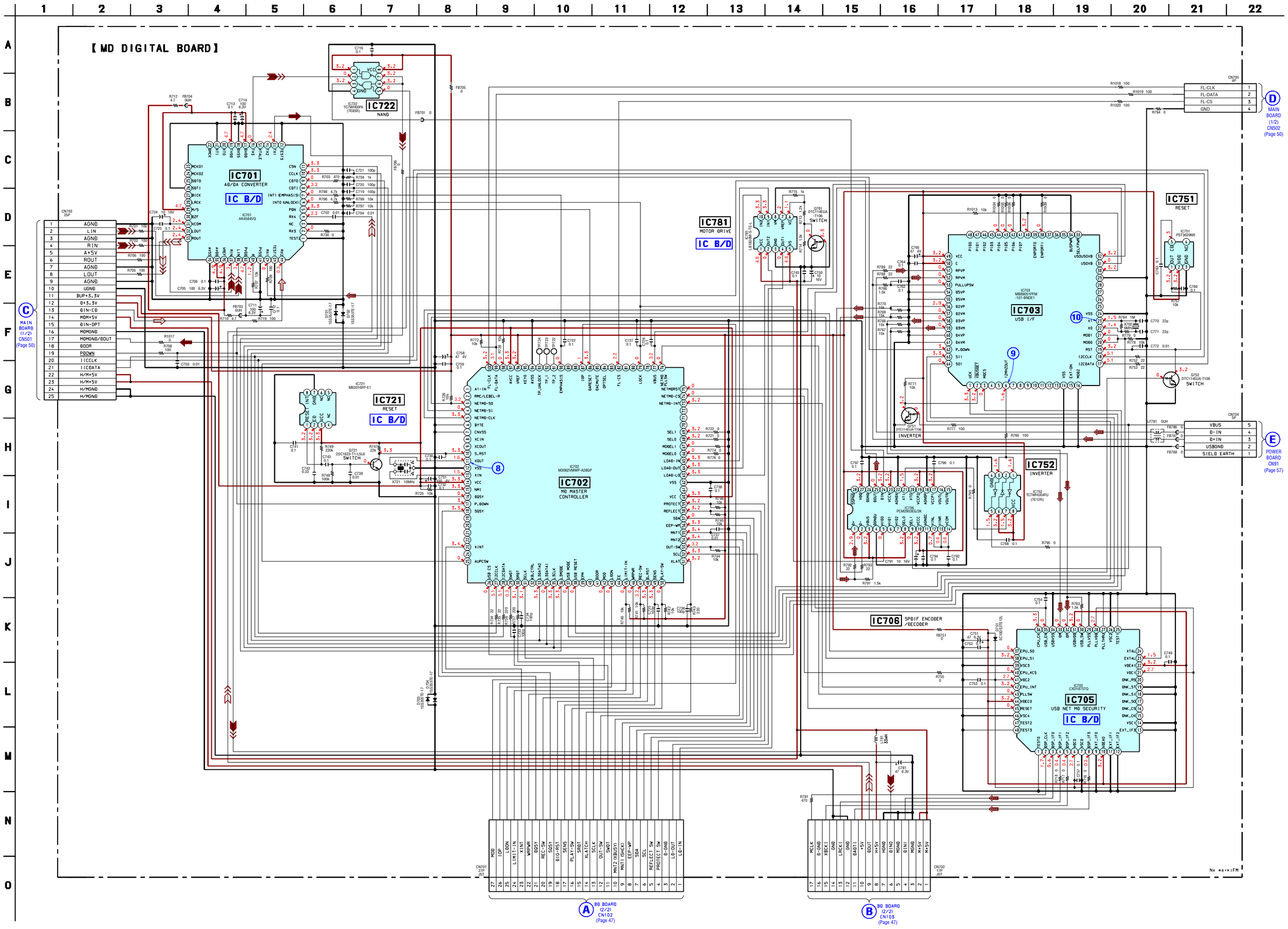

7-11. PRINTED WIRING BOARD – PANEL BOARD – • See page 41 for Circuit Boards Location. • **: Uses unleaded solder.**

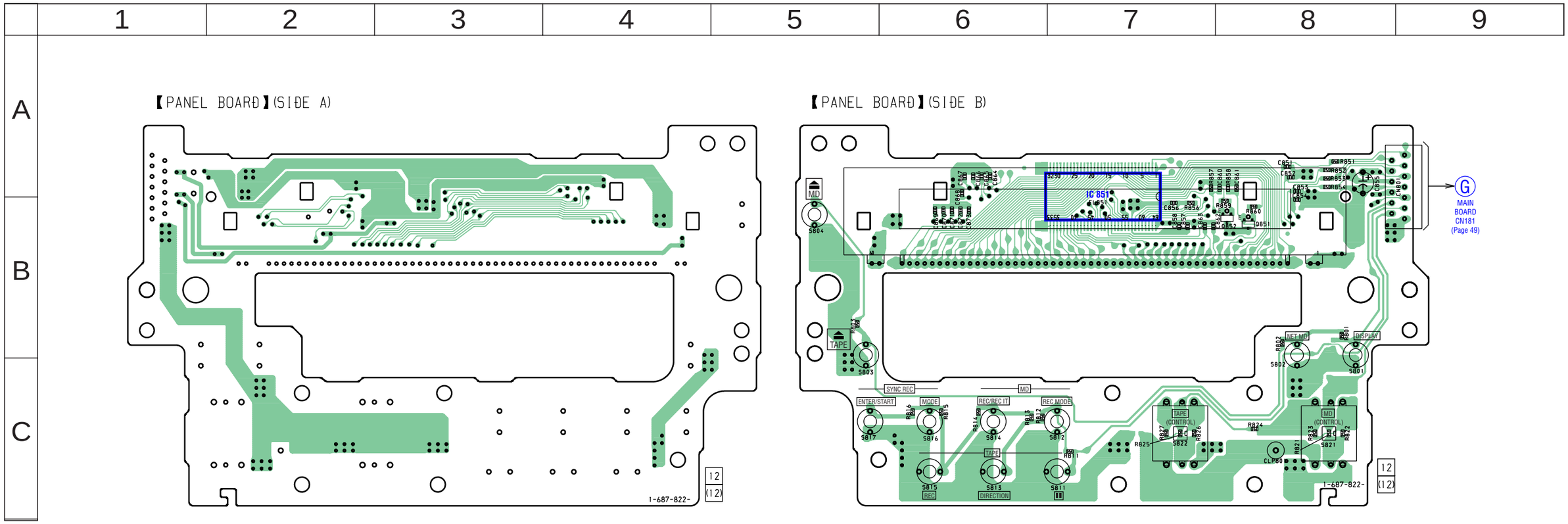

• **Semiconductor Location**

Ref. No.	Location
IC851	A-7
Q851	B-8
Q852	B-8

7-12. SCHEMATIC DIAGRAM – PANEL BOARD –

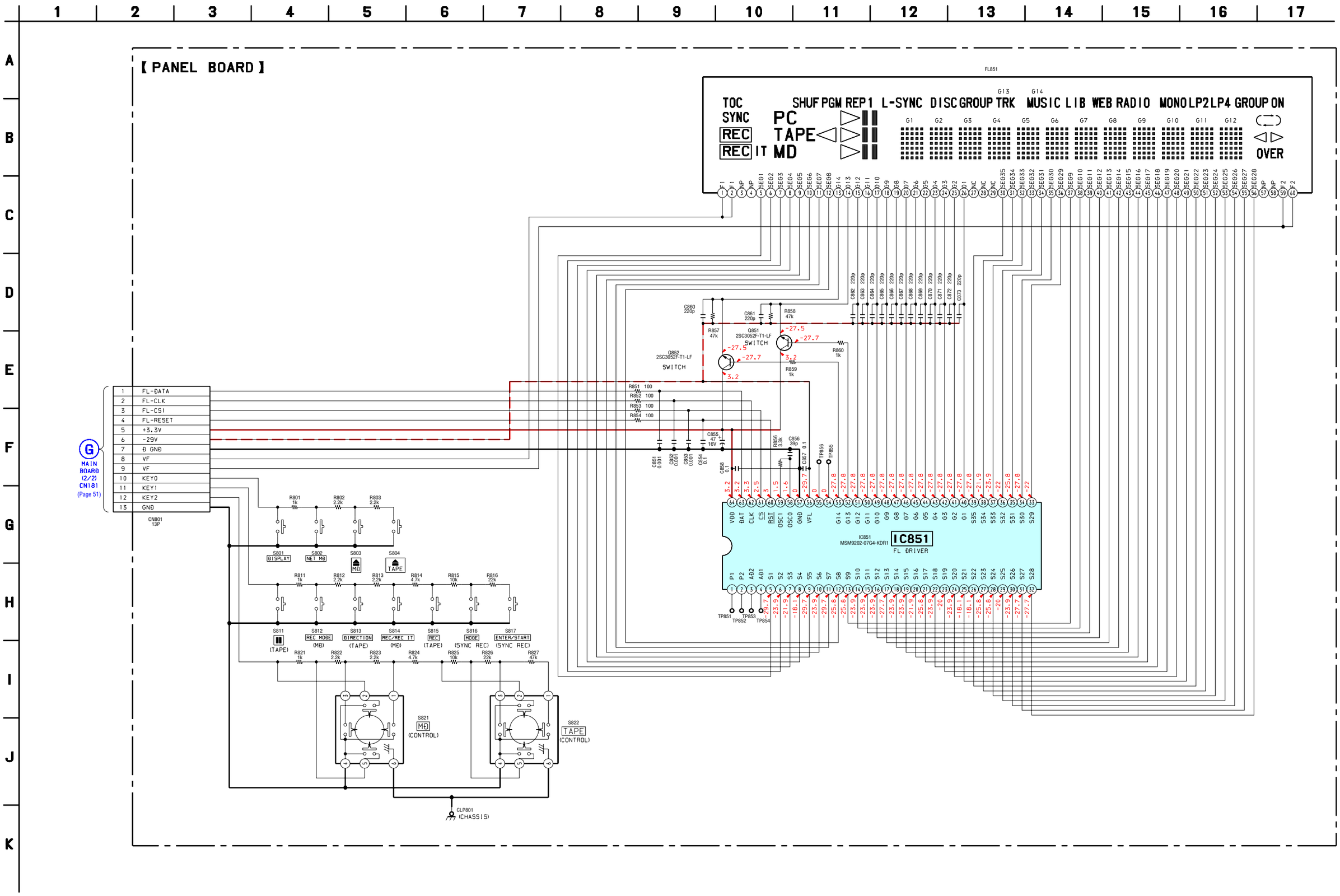

7-13. PRINTED WIRING BOARD – POWER BOARD – • See page 41 for Circuit Boards Location. • **: Uses unleaded solder.**

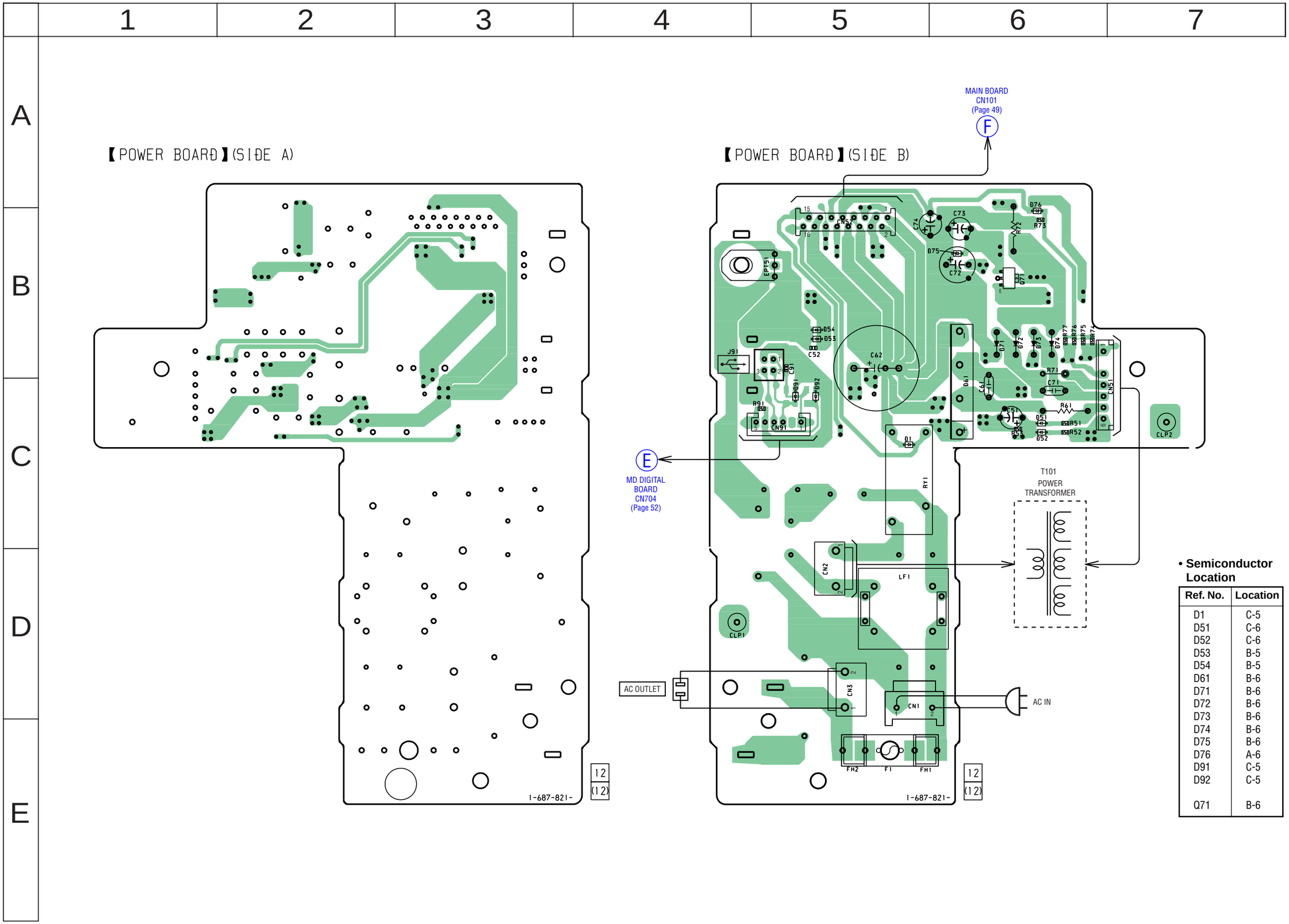

• **Semiconductor Location**

Ref. No.	Location
D1	C-5
D51	C-6
D52	C-6
D53	B-5
D54	B-5
D61	B-6
D71	B-6
D72	B-6
D73	B-6
D74	B-6
D75	B-6
D76	A-6
D91	C-5
D92	C-5
Q71	B-6

7-14. SCHEMATIC DIAGRAM – POWER BOARD –

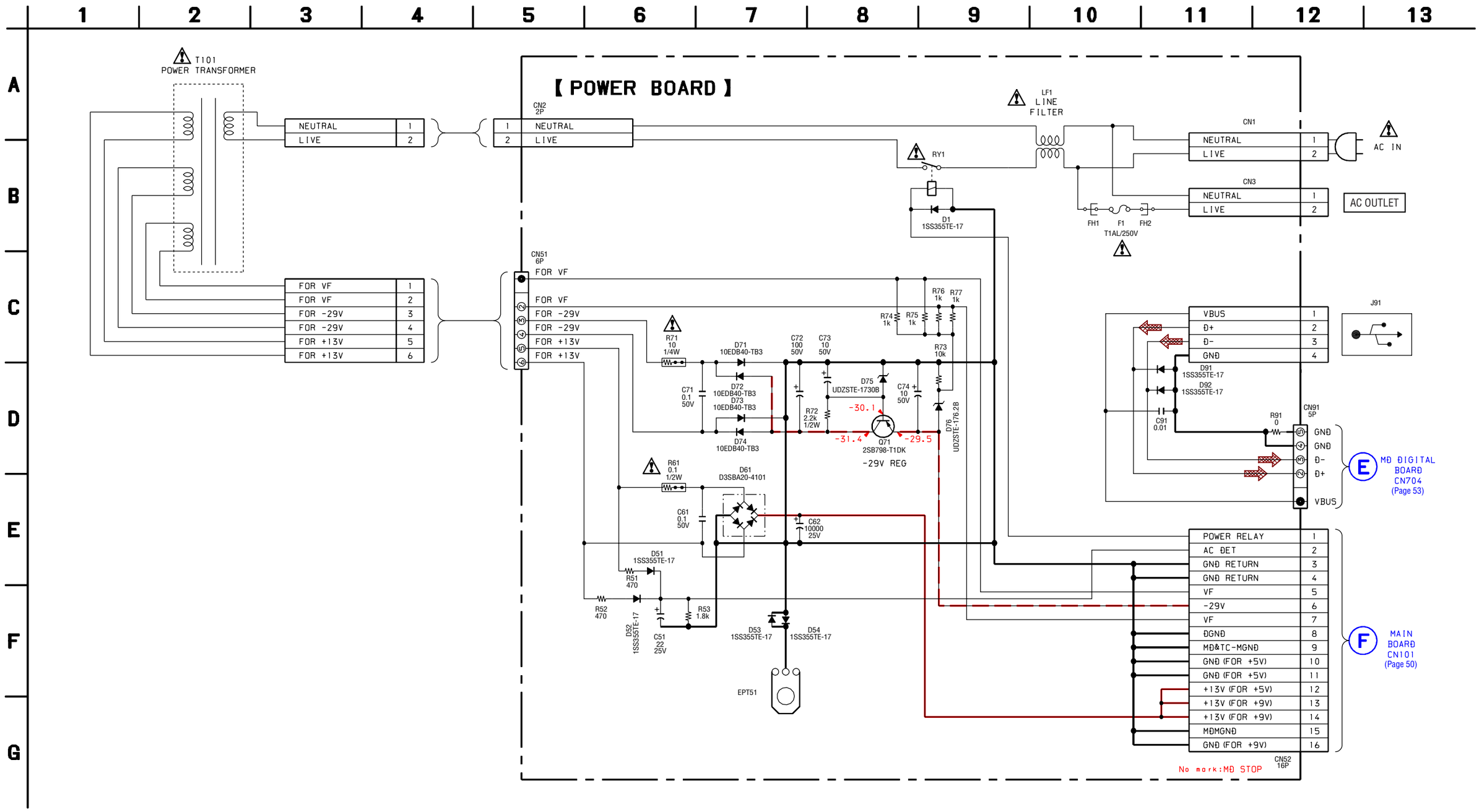

• IC BLOCK DIAGRAMS

– BD Board –

IC201 CXD2664R

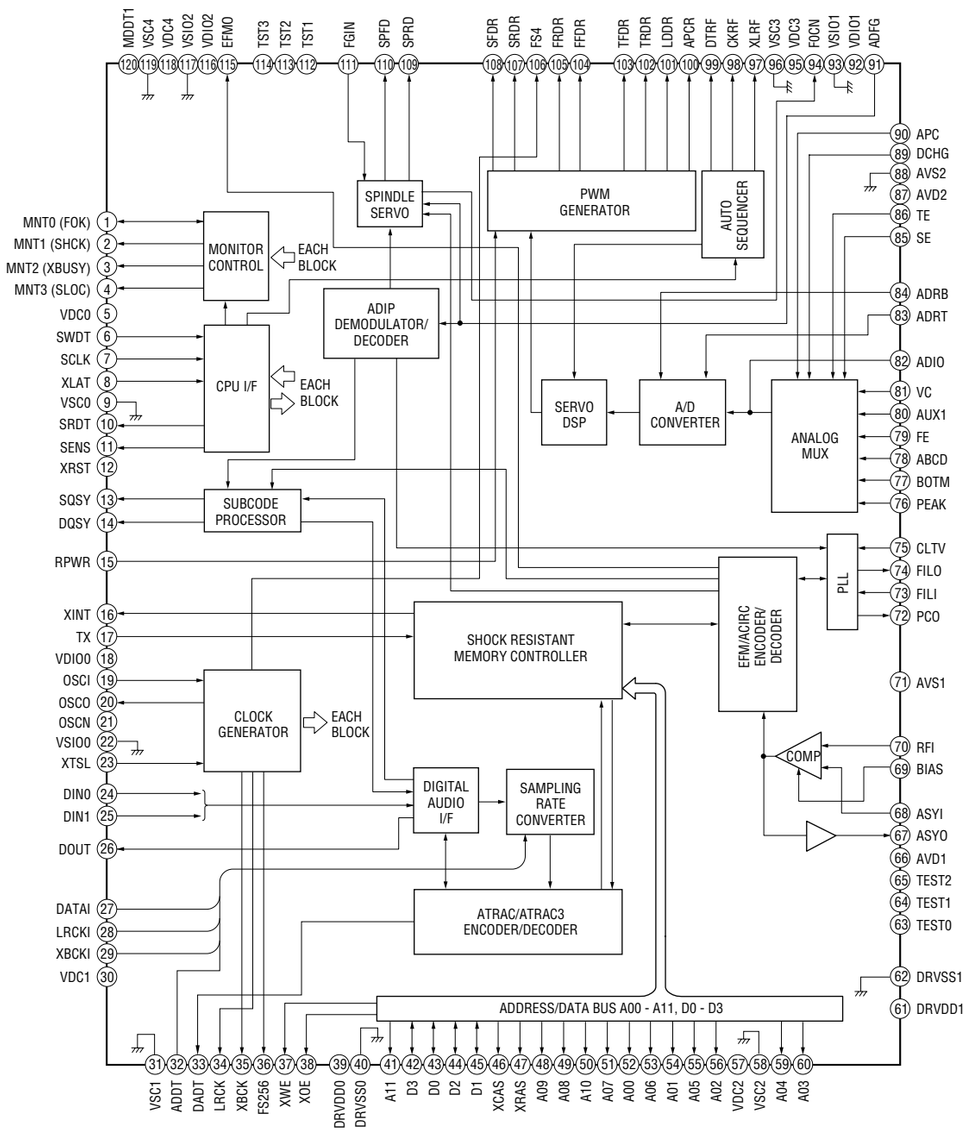

IC401 BH6519FS-E2

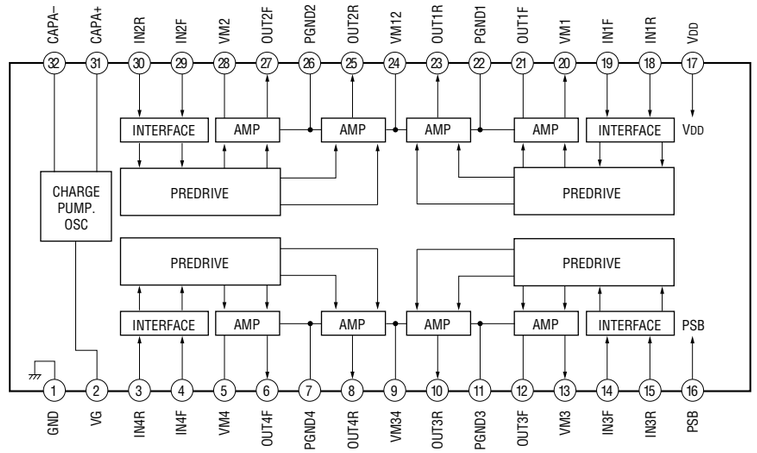

– MD DIGITAL Board –

IC701 AK4584VQ

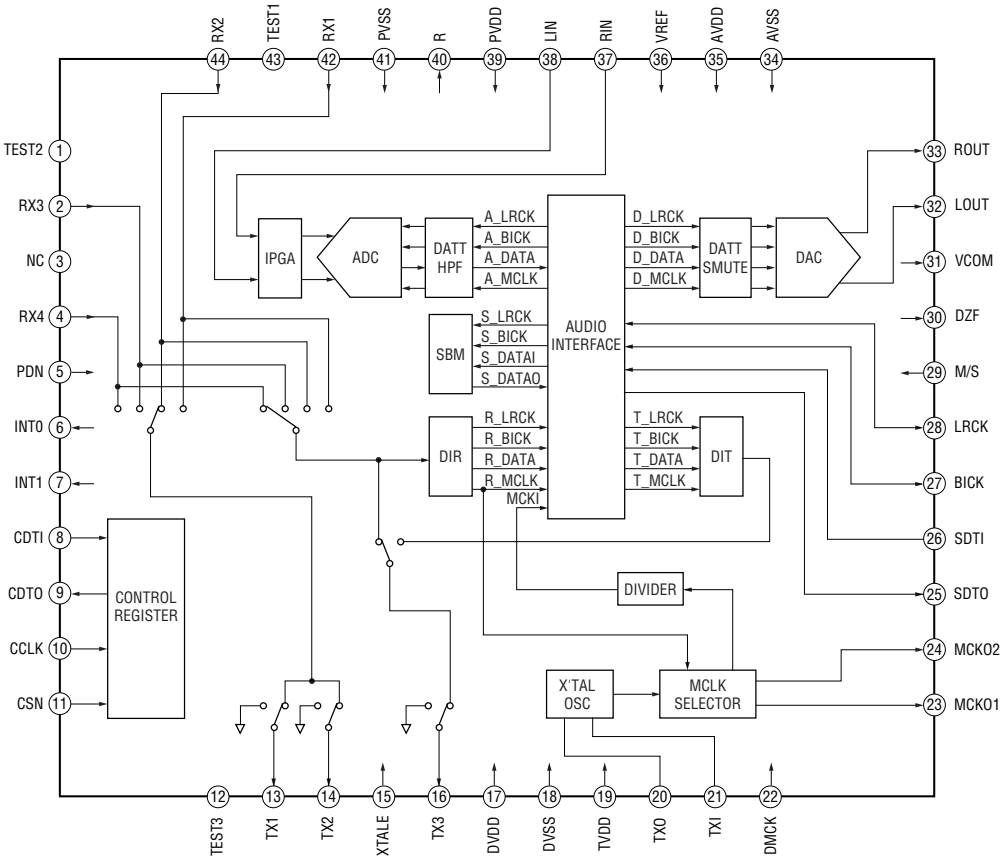

IC705 CXD1875TQ

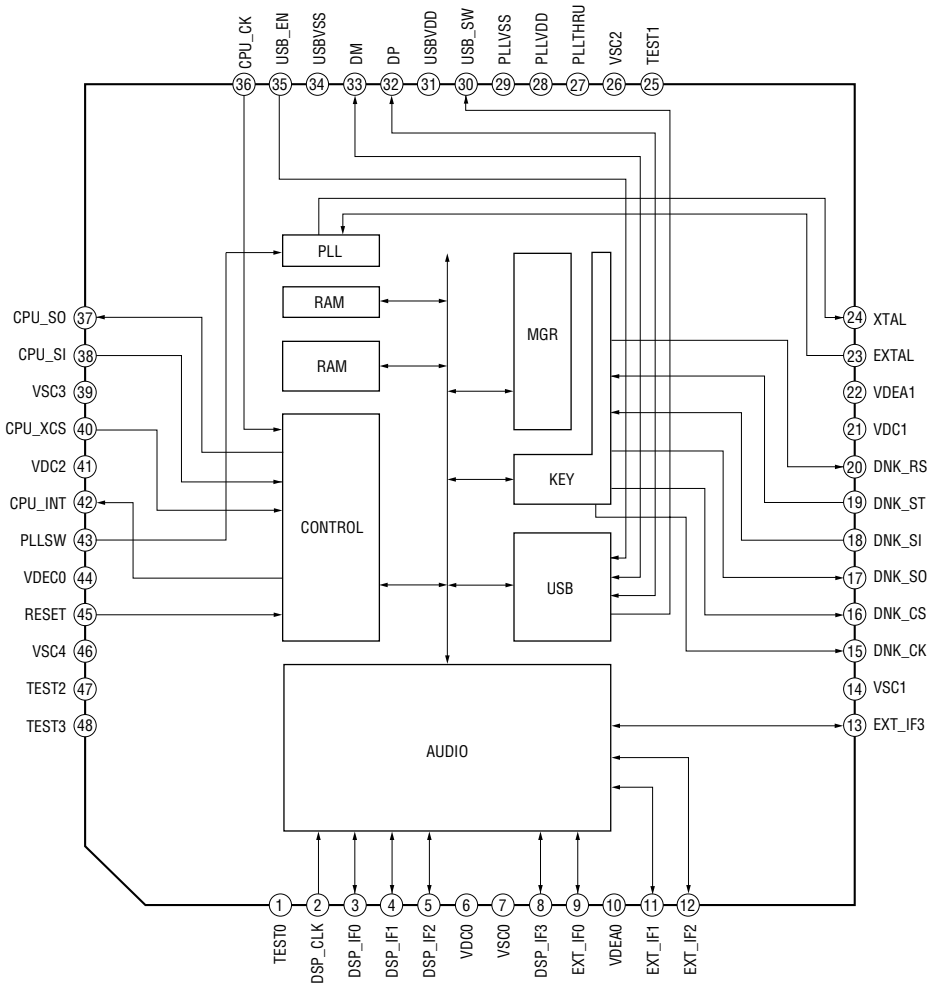

IC721 M62016FP-E1

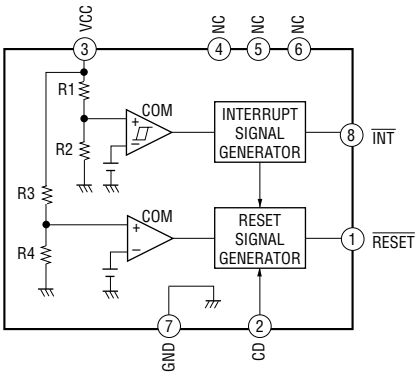

IC781 LB1830M-S-TE-L

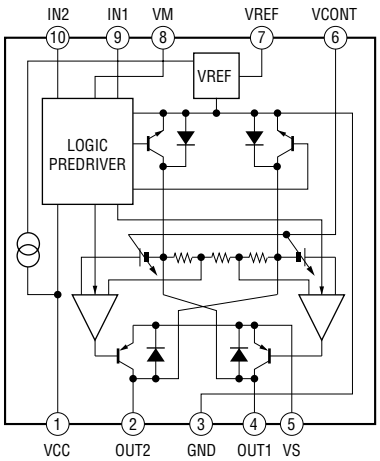

7-15. IC PIN FUNCTION DESCRIPTION

• IC151 M38514M6-C12FP SYSTEM CONTROLLER (MAIN Board)

Pin No.	Pin Name	I/O	Description
1	VCC	–	Power supply terminal
2	VREF	–	Reference voltage input terminal
3	AVSS	–	Ground terminal (analog)
4	4052A	O	Selection signal input to the selector (IC401)
5	4052B	O	Selection signal input to the selector (IC401)
6	P.DOWN	I	AC cut detection signal input (“L” : AC cut, “H” : normal)
7	P41	–	Terminal for flash program
8	PDOWN-OUT	O	MD power supply control signal output
9	$\overline{\text{SRDY1}}$	O	Terminal for flash program
10	SCLK1	I	Terminal for flash program
11	TXD	O	Terminal for flash program
12	RXD	I	Terminal for flash program
13	I2C-CLK	I/O	IIC communication clock
14	I2C-DATA	I/O	IIC communication data
15	CNVSS	–	Terminal for flash program
16	BIAS	O	Bias on/off signal output
17	+MTR	O	Capstan motor signal output
18	$\overline{\text{RESET}}$	I	Reset signal input (“L” : active)
19	XIN	O	Main clock input (8MHz)
20	XOUT	O	Main clock output (8MHz)
21	VSS	–	Ground terminal
22	TP151	O	Not used (open)
23	REC LED	O	Terminal for checking
24	PAUSE LED	O	Terminal for checking
25	FWD LED	O	Terminal for checking
26	REV LED	O	Terminal for checking
27	TC-RELAY	O	Recording/playback control signal output
28	PLAY SW	I	TC PLAY switch signal output
29	+SOL	O	TC solenoid control signal output
30	TP152	O	Not used (open)
31	REC MUTE	O	TC record muting signal output
32	TC-MUTE	O	TC line muting signal output
33	ALC	O	ALC signal output (“L” : ON, “H” : OFF)
34	LOAD IN SW	I	Tape load in switch signal input
35	LOAD OUT SW	I	Tape load out switch signal input
36	LOAD IN	O	Tape loading motor control signal output
37	LOAD OUT	O	Tape loading motor control signal output
38	END SW	I	TC END switch signal input
39	B-HALF	I	TC switch (F REC, R REC) signal input
40	KEY2	I	Function key input
41	KEY1	I	Function key input
42	KEY0	I	Function key input

• IC702 M3062VMWP-A18GP MD MASTER CONTROLLER (MD DIGITAL Board)

Pin No.	Pin Name	I/O	Description
1	VCC	–	Power supply terminal
2	VREF	–	Reference voltage input terminal
3	AVSS	–	Ground terminal (analog)
4	4052A	O	Selection signal input to the selector (IC401)
5	4052B	O	Selection signal input to the selector (IC401)
6	P.DOWN	I	AC cut detection signal input (“L” : AC cut, “H” : normal)
7	P41	–	Terminal for flash program
8	PDOWN-OUT	O	MD power supply control signal output
9	SRDY1	O	Terminal for flash program
10	SCLK1	I	Terminal for flash program
11	TXD	O	Terminal for flash program
12	RXD	I	Terminal for flash program
13	I2C-CLK	I/O	IIC communication clock
14	I2C-DATA	I/O	IIC communication data
15	CNVSS	–	Terminal for flash program
16	BIAS	O	Bias on/off signal output
17	#NAME?	O	Capstan motor signal output
18	RESET	I	Reset signal input (“L” : active)
19	XIN	O	Main clock input (8MHz)
20	XOUT	O	Main clock output (8MHz)
21	VSS	–	Ground terminal
22	TP151	O	Not used (open)
23	REC LED	O	Terminal for checking
24	PAUSE LED	O	Terminal for checking
25	FWD LED	O	Terminal for checking
26	REV LED	O	Terminal for checking
27	TC-RELAY	O	Recording/playback control signal output
28	PLAY SW	I	TC PLAY switch signal output
29	#NAME?	O	TC solenoid control signal output
30	TP152	O	Not used (open)
31	REC MUTE	O	TC record muting signal output
32	TC-MUTE	O	TC line muting signal output
33	ALC	O	ALC signal output (“L” : ON, “H” : OFF)
34	LOAD IN SW	I	Tape load in switch signal input
35	LOAD OUT SW	I	Tape load out switch signal input
36	LOAD IN	O	Tape loading motor control signal output
37	LOAD OUT	O	Tape loading motor control signal output
38	END SW	I	TC END switch signal input
39	B-HALF	I	TC switch (F REC, R REC) signal input
40	KEY2	I	Function key input
41	KEY1	I	Function key input
42	KEY0	I	Function key input

• **IC703 MB89051PFM-101-BNDE1 USB I/F (MD DIGITAL Board)**

Pin No.	Pin Name	I/O	Description
1	UCK	I	Clock input from the MD Master Controller (IC702)
2	$\overline{\text{VBUSDET}}$	I	VBUS check signal input
3	MDCS	I	Chip selection signal from the MD Master Controller (IC702)
4, 5	NC	O	Not used (open)
6	12MHZOUT	O	Clock output (12kHz)
7 to 13	NC	–	Not used (open)
14	VSS	–	Ground terminal (USB)
15	EXT-ON	–	Not used (open)
16	MOD2	I	Operation mode setting terminal
17	I2CDATA	I/O	Not used (open)
18	I2CCLK	I/O	Not used (open)
19	RST	I	Reset signal input
20, 21	MOD0, MOD1	I	Operation mode setting terminal
22	X0	I	Crystal resonator terminal (6MHz)
23	X1	O	Crystal resonator terminal (6MHz)
24	VSS	–	Ground terminal (USB)
25 to 28	NC	–	Not used (open)
29	NC	–	Not used (connected to the ground)
30	NC	–	Not used (pull up)
31	USOVB	O	VBUS check signal output
32	USOUSOVB	O	VBUS check signal output
33	SELFPWR	–	Not used (open)
34	BUSPWR	I	Not used (connected to the ground)
35 to 37	NC	–	Not used (open)
38	ENPORT1	I	USB down port number input terminal
39	ENPORT0	I	USB down port number input terminal
40	NC	–	Not used (pull up)
41	PID7	I	Product ID input terminal (connected to the ground)
42	PID6	I	Product ID input terminal (connected to the ground)
43	PID5	I	Product ID input terminal (connected to the ground)
44	PID4	I	Product ID input terminal (open)
45 to 48	PID3 to PID0	–	Not used (open)
49	VCC	–	Power supply terminal
50	C	–	Not used (fixed at “H”)
51	RPVP	I/O	USB route port (+ terminal)
52	RPVM	I/O	USB route port (- terminal)
53	PULLUPSW	O	USB D+ pull up output
54	RPVP	I/O	USB route port (+ terminal)
55	RPVM	I/O	USB route port (- terminal)
56	D2VP	I/O	USB down port 2 (+ terminal)
57	D2VM	I/O	USB down port 2 (- terminal)
58	D3VP	I/O	USB down port 3 (+ terminal)
59	D3VM	I/O	USB down port 3 (- terminal)
60	D4VP	I/O	USB down port 4 (+ terminal) Not used (connected to the ground)
61	D4VM	I/O	USB down port 4 (- terminal) Not used (connected to the ground)
62	P.DOWN	I	Power supply status signal input
63	SI1	I	Serial data input from the MD Master Controller (IC702)
64	SO1	O	Serial data output to the MD Master Controller (IC702)

SECTION 8
EXPLODED VIEWS

NOTE:
- -XX, -X mean standardized parts, so they may have some differences from the original one.
- Items marked "*" are not stocked since they are seldom required for routine service. Some delay should be anticipated when ordering these items.
- The mechanical parts with no reference number in the exploded views are not supplied.

The components identified by mark ⚠ or dotted line with mark ⚠ are critical for safety. Replace only with part number specified.

8-1. OVERALL SECTION

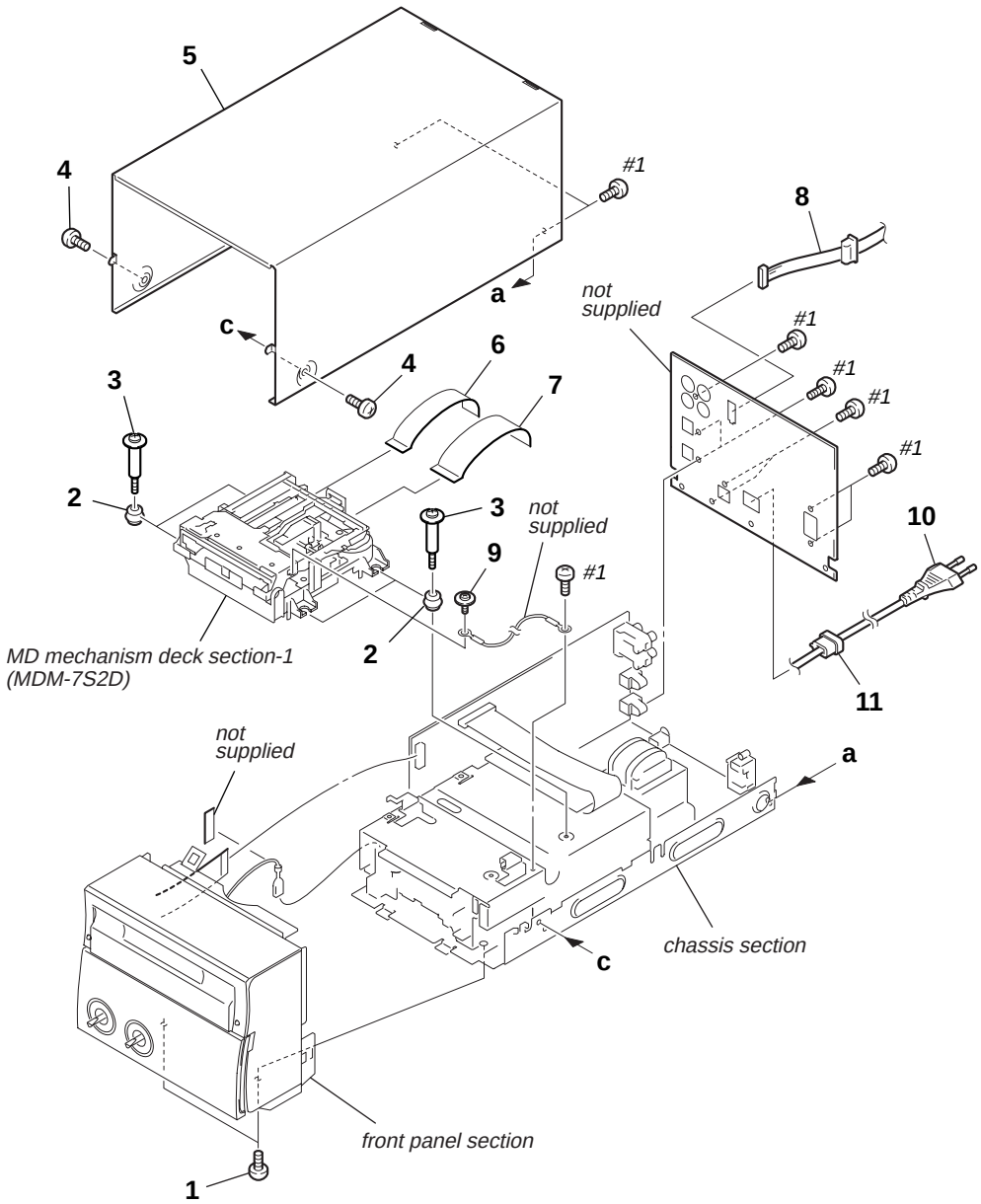

Ref. No.	Part No.	Description	Remarks	Ref. No.	Part No.	Description	Remarks
1	3-970-608-01	SUMITITE (B3), +BV		7	1-775-238-11	WIRE (FLAT TYPE) (27 CORE)	
2	4-231-555-01	INSULATOR		8	1-827-037-11	CORD (WITH CONNECTOR) 7P	
3	4-228-643-21	SCREW (+BVTTWH M3), STEP		9	4-231-113-01	SCREW (1.7X3), BTN	
4	4-221-580-01	SCREW, CASE		⚠10	1-777-071-63	CORD, POWER	
5	4-245-364-01	CASE		11	4-217-350-11	STOPPER, CORD	
6	1-775-153-11	WIRE (FLAT TYPE) (17 CORE)		#1	7-685-646-79	SCREW +BVTP 3X8, TYPE2, IT-3	

8-2. FRONT PANEL SECTION

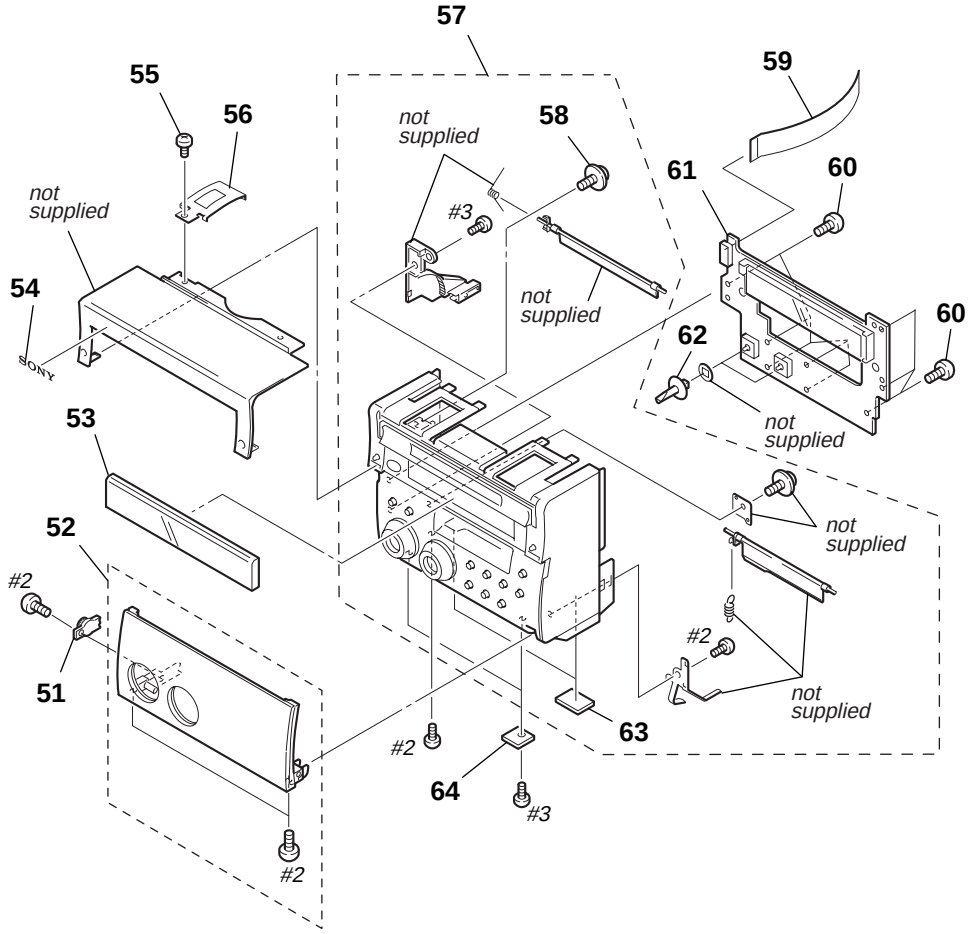

Ref. No.	Part No.	Description	Remarks	Ref. No.	Part No.	Description	Remarks
51	4-245-464-01	DAMPER		59	1-769-972-11	WIRE (FLAT TYPE) (13 CORE)	
52	X-4955-754-1	LID (MD) ASSY		60	4-931-757-31	SCREW(DIA.2.6X8)(IT3B),TAPPING	
53	4-245-354-01	WINDOW (FL)		61	A-4732-544-A	PANEL BOARD, COMPLETE	
54	4-969-961-11	EMBLEM (NO.4), SONY		62	4-245-356-01	KNOB (LEVER)	
55	4-247-906-01	BRACKET(B0)		63	4-232-478-31	FOOT	
56	4-247-905-01	PLATE (ALUMINUM PANEL), GROUND		64	4-245-372-01	BRACKET (LID)	
57	X-4955-455-1	PANEL (MD) ASSY, FRONT		#2	7-685-102-19	SCREW +P 2X4, NON-SLIT, TYPE 2	
58	4-985-672-01	SCREW (+PTPWHM2.6), FLOATING		#3	7-685-104-19	SCREW +P 2X6, TYPE2, NON-SLIT	

8-3. CHASSIS SECTION

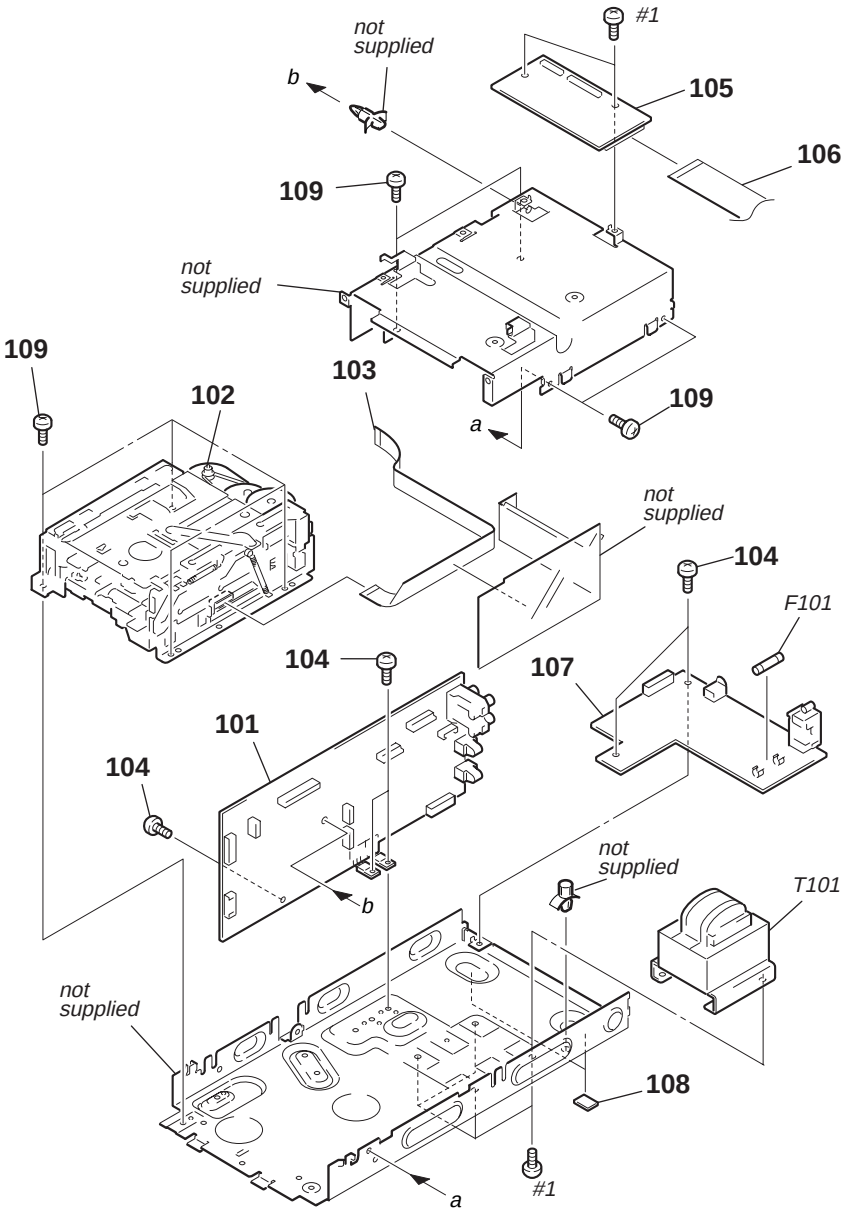

Ref. No.	Part No.	Description	Remarks	Ref. No.	Part No.	Description	Remarks
101	A-4732-542-A	MAIN BOARD, COMPLETE		107	A-4732-549-A	POWER BOARD, COMPLETE	
102	1-796-665-11	DECK, MECH		108	4-232-478-31	FOOT	
103	1-827-281-11	WIRE (FLAT TYPE) (10 CORE)		109	3-970-608-01	SUMITITE (B3), +BV	
104	3-970-608-11	SUMITITE (B3), +BV		⚠F101	1-533-465-11	FUSE, GLASS TUBE (DIA. 5) T1AL/250V	
105	A-4732-551-A	MD DIGITAL BOARD, COMPLETE		⚠T101	1-439-673-11	TRANSFORMER, POWER	
106	1-773-215-11	WIRE (FLAT TYPE) (25 CORE)		#1	7-685-646-79	SCREW +BVTP 3X8, TYPE2, IT-3	

The components identified by mark ⚠ or dotted line with mark ⚠ are critical for safety.
Replace only with part number specified.

8-4. MD MECHANISM DECK SECTION-1 (MDM-7S2D)

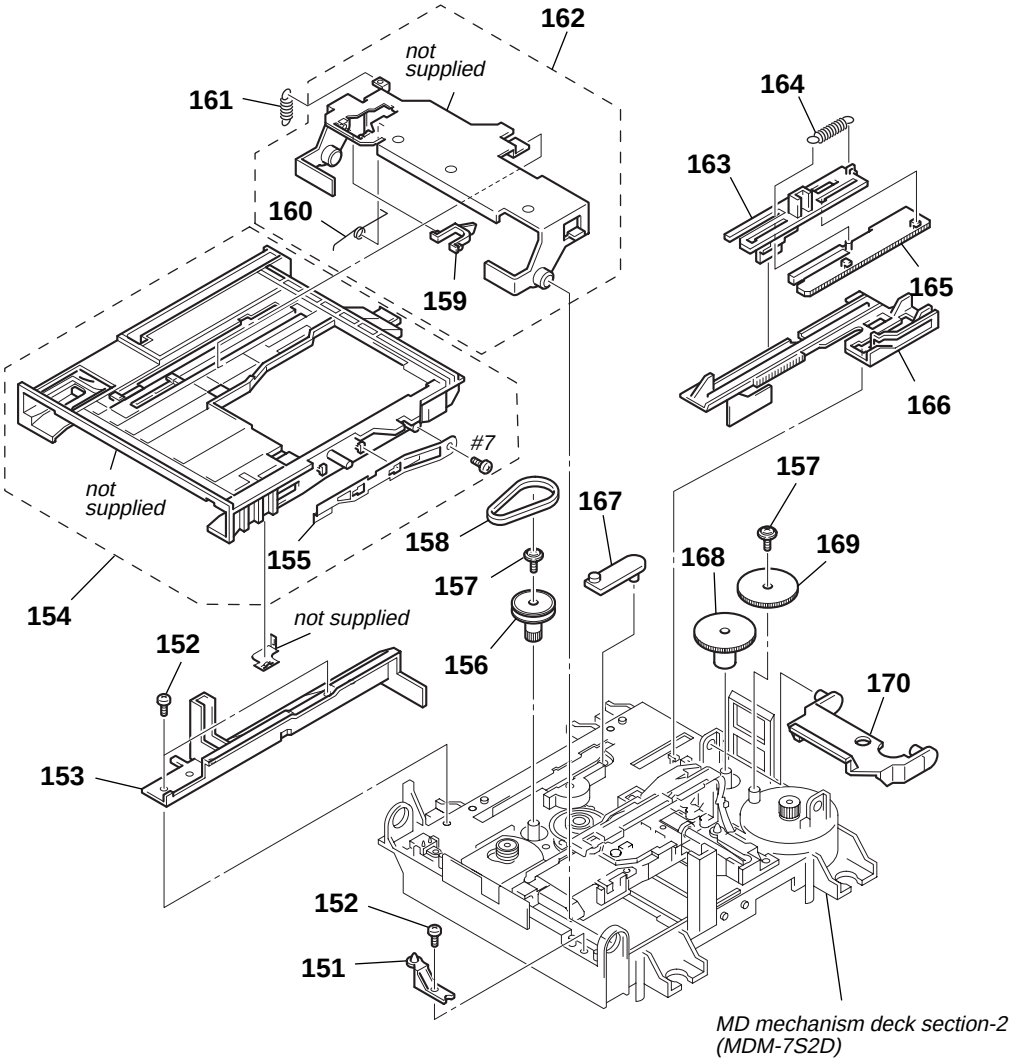

Ref. No.	Part No.	Description	Remarks
* 151	4-996-267-01	BASE (BU-D)	
152	4-231-319-01	SCREW (2X6) CZN, +B (P) TRI	
153	4-226-994-01	GUIDE (L)	
154	A-4735-075-B	HOLDER ASSY	
155	X-4952-665-1	SPRING (SHT) ASSY, LEAF	
156	4-227-002-01	GEAR, PULLEY	
157	3-372-761-01	SCREW (M1.7), TAPPING	
158	4-227-025-01	BELT (LOADING)	
159	A-4680-638-A	LOCK (HOLDER)	
160	4-229-533-02	SPRING (STOPPER), TORSION	
161	4-227-012-01	SPRING (HOLDER), TENSION	
162	A-4680-638-B	RETAINER COMPLETE ASSY	
163	4-226-995-01	SLIDER (EJ)	
164	4-227-013-01	SPRING (EJ), TENSION	
165	4-226-996-01	LIMITTER (EJ)	
166	4-226-997-04	SLIDER	
167	4-226-998-01	LEVER (CHG)	
168	4-227-007-01	GEAR (SB)	
169	4-227-006-01	GEAR (SA)	
170	4-226-999-01	LEVER (HEAD)	
#7	7-685-850-04	SCREW +BVTT 2X3 (S)	

8-5. MD MECHANISM DECK SECTION-2 (MDM-7S2D)

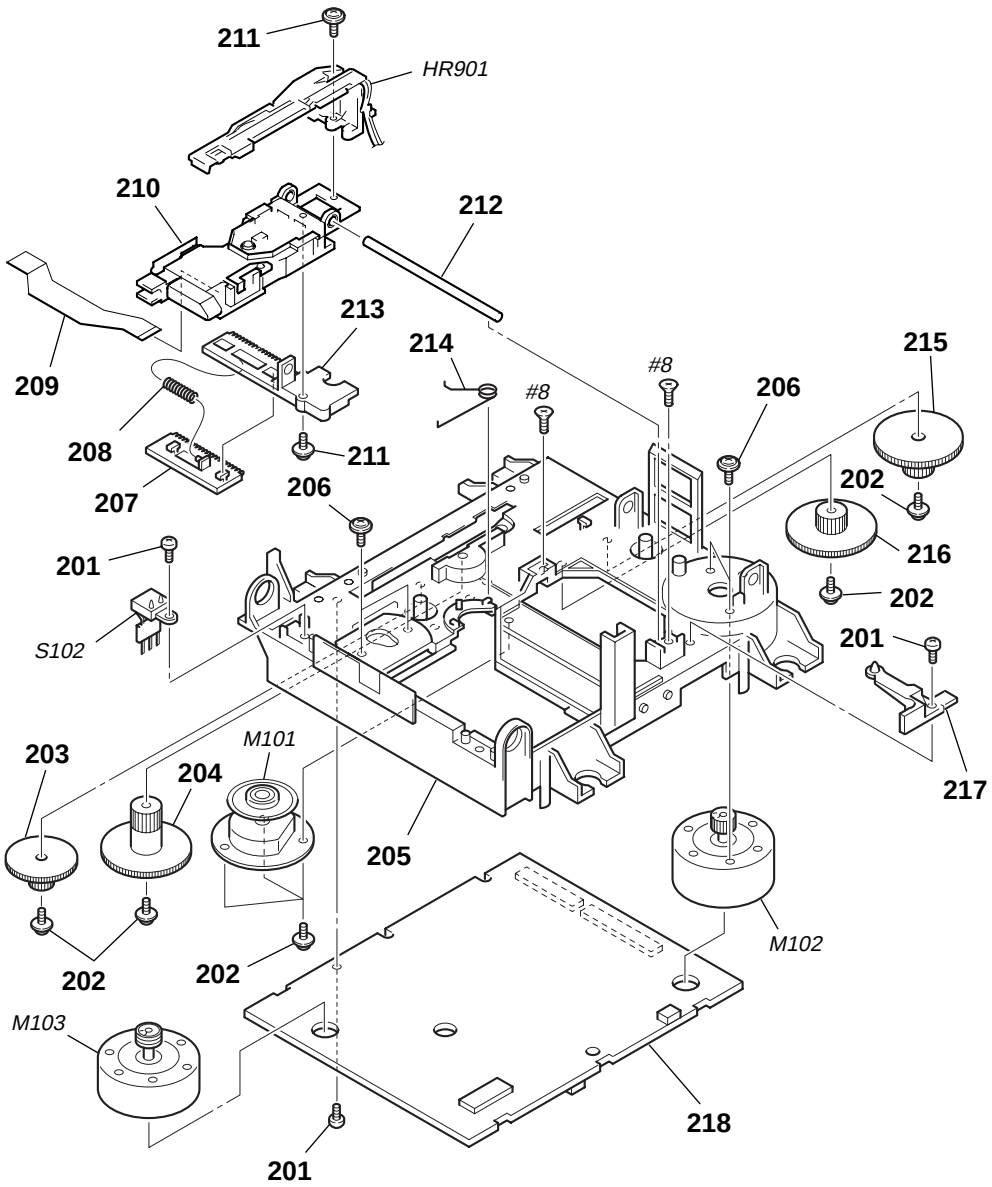

Ref. No.	Part No.	Description	Remarks
201	4-231-319-01	SCREW (2X6) CZN, +B (P) TRI	
202	3-372-761-01	SCREW (M1.7), TAPPING	
203	4-227-008-01	GEAR (SC)	
204	4-227-009-01	GEAR (SD)	
205	4-231-372-03	CHASSIS	
206	4-232-270-01	SCREW (1.7X3.5), +PWH	
207	4-226-993-01	RACK	
208	4-227-014-01	SPRING (RACK), COMPRESSION	
209	1-678-514-11	PWB, FLEXIBLE	
⚠210	A-4672-976-A	OPTICAL PICK-UP, KMS-262E	
211	4-988-560-01	SCREW (+P 1.7X6)	
212	4-996-265-01	SHAFT, MAIN	
213	4-226-992-01	BASE, SL	
214	4-230-716-01	SPRING (SPDL), TORSION	

Ref. No.	Part No.	Description	Remarks
215	4-227-004-01	GEAR (LC)	
216	4-227-005-01	GEAR (LD)	
217	4-226-990-04	BASE (BU-A)	
218	A-4731-095-A	BD BOARD, COMPLETE	
HR901	1-500-670-22	HEAD, OVER LIGHT	
M101	A-4735-757-A	MOTOR ASSY, SPINDLE	
M102	A-4672-900-A	MOTOR ASSY, SLED	
M103	A-4672-975-A	MOTOR ASSY, LOADING	
S102	1-771-957-11	SWITCH, PUSH (2 KEY) (REFLECT/PROTECT)	
#8	7-685-204-19	SCREW +KTP 2X6, TYPE2, NON-SLIT	

The components identified by mark ⚠ or dotted line with mark ⚠ are critical for safety.
Replace only with part number specified.

SECTION 9
ELECTRICAL PARTS LIST

BD

NOTE:
- Due to standardization, replacements in the parts list may be different from the parts specified in the diagrams or the components used on the set.
- -XX, -X mean standardized parts, so they may have some difference from the original one.
- Items marked "*" are not stocked since they are seldom required for routine service. Some delay should be anticipated when ordering these items.
- CAPACITORS:
  uF: µF
- COILS
  uH: µH
- RESISTORS
  All resistors are in ohms.
  METAL: metal-film resistor
  METAL OXIDE: Metal Oxide-film resistor
  F: nonflammable
- SEMICONDUCTORS
  In each case, u: µ, for example:
  uA...: µA... , uPA... , µPA... ,
  uPB... , µPB... , uPC... , µPC... ,
  uPD..., µPD...

When indicating parts by reference number, please include the board name.

The components identified by mark ⚠ or dotted line with mark ⚠ are critical for safety. Replace only with part number specified.

Ref. No.	Part No.	Description			Remarks
	A-4731-095-A	BD BOARD, COMPLETE			
		**********			
		< CAPACITOR >			
C101	1-117-720-11	CERAMIC CHIP	4.7uF		10V
C103	1-162-970-11	CERAMIC CHIP	0.01uF	10%	25V
C104	1-164-156-11	CERAMIC CHIP	0.1uF		25V
C105	1-135-259-11	TANTAL. CHIP	10uF	20.00%	6.3V
C106	1-135-259-11	TANTAL. CHIP	10uF	20.00%	6.3V
C107	1-164-227-11	CERAMIC CHIP	0.022uF	10%	25V
C108	1-164-156-11	CERAMIC CHIP	0.1uF		25V
C109	1-165-176-11	CERAMIC CHIP	0.047uF	10.00%	16V
C110	1-115-416-11	CERAMIC CHIP	0.001uF	5.00%	25V
C111	1-162-970-11	CERAMIC CHIP	0.01uF	10%	25V
C112	1-164-227-11	CERAMIC CHIP	0.022uF	10%	25V
C113	1-162-969-11	CERAMIC CHIP	0.0068uF	10%	25V
C114	1-162-966-11	CERAMIC CHIP	0.0022uF	10%	50V
C115	1-164-156-11	CERAMIC CHIP	0.1uF		25V
C116	1-117-720-11	CERAMIC CHIP	4.7uF		10V
C117	1-162-970-11	CERAMIC CHIP	0.01uF	10%	25V
C118	1-162-968-11	CERAMIC CHIP	0.0047uF	10%	50V
C119	1-125-837-91	CERAMIC CHIP	1uF	10%	6.3V
C120	1-110-563-11	CERAMIC CHIP	0.068uF	10.00%	16V
C121	1-162-970-11	CERAMIC CHIP	0.01uF	10%	25V
C122	1-164-677-11	CERAMIC CHIP	0.033uF	10.00%	16V
C175	1-164-156-11	CERAMIC CHIP	0.1uF		25V
C194	1-164-156-11	CERAMIC CHIP	0.1uF		25V
C205	1-162-966-11	CERAMIC CHIP	0.0022uF	10%	50V
C206	1-126-206-11	ELECT CHIP	100uF	20%	6.3V
C209	1-162-927-11	CERAMIC CHIP	100PF	5%	50V
C211	1-162-927-11	CERAMIC CHIP	100PF	5%	50V
C212	1-162-927-11	CERAMIC CHIP	100PF	5%	50V
C214	1-162-970-11	CERAMIC CHIP	0.01uF	10%	25V
C215	1-164-677-11	CERAMIC CHIP	0.033uF	10.00%	16V
C216	1-125-889-91	CERAMIC CHIP	2.2uF	10%	10V
C219	1-162-927-11	CERAMIC CHIP	100PF	5%	50V
C220	1-125-891-11	CERAMIC CHIP	0.47uF	10.00%	10V
C221	1-162-970-11	CERAMIC CHIP	0.01uF	10%	25V
C230	1-164-156-11	CERAMIC CHIP	0.1uF		25V
C231	1-164-156-11	CERAMIC CHIP	0.1uF		25V
C233	1-164-156-11	CERAMIC CHIP	0.1uF		25V
C234	1-164-156-11	CERAMIC CHIP	0.1uF		25V
C235	1-164-156-11	CERAMIC CHIP	0.1uF		25V
C240	1-164-156-11	CERAMIC CHIP	0.1uF		25V
C241	1-164-156-11	CERAMIC CHIP	0.1uF		25V
C242	1-164-156-11	CERAMIC CHIP	0.1uF		25V
C250	1-164-156-11	CERAMIC CHIP	0.1uF		25V
C251	1-164-156-11	CERAMIC CHIP	0.1uF		25V
C252	1-164-156-11	CERAMIC CHIP	0.1uF		25V
C253	1-164-156-11	CERAMIC CHIP	0.1uF		25V
C254	1-162-970-11	CERAMIC CHIP	0.01uF	10%	25V
C255	1-164-156-11	CERAMIC CHIP	0.1uF		25V
C299	1-164-156-11	CERAMIC CHIP	0.1uF		25V
C301	1-164-156-11	CERAMIC CHIP	0.1uF		25V
C302	1-164-156-11	CERAMIC CHIP	0.1uF		25V
C405	1-164-156-11	CERAMIC CHIP	0.1uF		25V
C406	1-162-970-11	CERAMIC CHIP	0.01uF	10%	25V
C407	1-164-156-11	CERAMIC CHIP	0.1uF		25V
C409	1-164-156-11	CERAMIC CHIP	0.1uF		25V
C410	1-126-206-11	ELECT CHIP	100uF	20%	6.3V
C411	1-117-720-11	CERAMIC CHIP	4.7uF		10V
C412	1-162-964-11	CERAMIC CHIP	0.001uF	10%	50V
C490	1-164-156-11	CERAMIC CHIP	0.1uF		25V
C501	1-128-795-91	ELECT CHIP	470PF	10%	630V
C502	1-164-156-11	CERAMIC CHIP	0.1uF		25V
C503	1-164-156-11	CERAMIC CHIP	0.1uF		25V
C504	1-117-370-11	CERAMIC CHIP	10uF		10V
C505	1-126-206-11	ELECT CHIP	100uF	20%	6.3V
C550	1-135-349-21	ELECT CHIP	22uF	20%	20V
C701	1-164-156-11	CERAMIC CHIP	0.1uF		25V
C702	1-117-720-11	CERAMIC CHIP	4.7uF		10V
C703	1-164-156-11	CERAMIC CHIP	0.1uF		25V
C704	1-165-176-11	CERAMIC CHIP	0.047uF	10.00%	16V
C801	1-162-918-11	CERAMIC CHIP	18PF	5.00%	50V
C802	1-162-917-11	CERAMIC CHIP	15PF	5%	50V
C803	1-115-416-11	CERAMIC CHIP	0.001uF	5.00%	25V
C809	1-117-720-11	CERAMIC CHIP	4.7uF		10V
C901	1-126-206-11	ELECT CHIP	100uF	20%	6.3V
C902	1-164-156-11	CERAMIC CHIP	0.1uF		25V
C903	1-126-206-11	ELECT CHIP	100uF	20%	6.3V
C904	1-164-156-11	CERAMIC CHIP	0.1uF		25V
C905	1-126-206-11	ELECT CHIP	100uF	20%	6.3V
C907	1-162-970-11	CERAMIC CHIP	0.01uF	10%	25V
C908	1-117-370-11	CERAMIC CHIP	10uF		10V
C909	1-104-852-11	TANTAL. CHIP	22uF	20.00%	10V
C911	1-162-970-11	CERAMIC CHIP	0.01uF	10%	25V
C998	1-164-156-11	CERAMIC CHIP	0.1uF		25V
C999	1-164-156-11	CERAMIC CHIP	0.1uF		25V
C1102	1-115-416-11	CERAMIC CHIP	0.001uF	5.00%	25V
		< CONNECTOR >			
CN101	1-766-833-21	CONNECTOR, FFC/FPC (ZIF) 21P			

BD

Ref. No.	Part No.	Description				Remarks
CN102	1-784-835-21	CONNECTOR, FFC (LIF (NON-ZIF)) 27P				
CN103	1-784-869-41	CONNECTOR, FFC (LIF (NON-ZIF)) 17P				
* CN104	1-580-055-21	PIN, CONNECTOR (SMD) 2P				
CN105	1-784-859-21	CONNECTOR, FFC (LIF (NON-ZIF)) 7P				
		< DIODE >				
D101	8-719-988-61	DIODE 1SS355TE-17				
D501	8-719-046-86	DIODE F1J6TP				
D502	8-719-046-86	DIODE F1J6TP				
		< IC >				
IC101	8-752-080-95	IC CXA2523AR				
IC152	6-700-052-01	IC MSM51V17400F-50TS-K				
IC181	8-759-481-17	IC MC74ACT08DTR2				
☆ IC195	————	IC BR24C16F-E2				
IC201	8-752-414-89	IC CXD2664R				
IC401	8-759-836-79	IC BH6519FS-E2				
IC701	8-759-473-51	IC TLV2361CDBV				
IC803	6-701-793-01	IC CY24115SZC-2				
IC926	8-759-835-63	IC NJM2391DL1-26 (TE1)				
IC933	8-759-460-72	IC BA033FP-E2				
		< COIL >				
L8	1-414-760-21	FERRITE	0uH			
L10	1-469-981-21	FERRITE	0uH			
L122	1-414-760-21	FERRITE	0uH			
L201	1-414-760-21	FERRITE	0uH			
L202	1-469-981-21	FERRITE	0uH			
L203	1-414-760-21	FERRITE	0uH			
L401	1-400-050-11	FERRITE	0uH			
L402	1-400-050-11	FERRITE	0uH			
L501	1-400-050-11	FERRITE	0uH			
L502	1-400-050-11	FERRITE	0uH			
L550	1-414-760-21	FERRITE	0uH			
L601	1-469-981-21	FERRITE	0uH			
L602	1-469-981-21	FERRITE	0uH			
L603	1-414-760-21	FERRITE	0uH			
L701	1-414-760-21	FERRITE	0uH			
L801	1-414-760-21	FERRITE	0uH			
* L899	1-500-282-11	FERRITE	0uH			
		< TRANSISTOR >				
Q181	8-729-048-87	TRANSISTOR	2SJ518AZTR			
Q182	8-729-048-88	TRANSISTOR	2SK2788VYTR			
Q201	8-729-403-35	TRANSISTOR	UN5113-TX			
Q202	8-729-101-07	TRANSISTOR	2SB798-T1DK			
Q203	8-729-403-35	TRANSISTOR	UN5113-TX			
Q701	8-729-402-93	TRANSISTOR	UN5214-TX			
Q702	8-729-903-10	TRANSISTOR	FMW1-T-148			
Q703	8-729-402-93	TRANSISTOR	UN5214-TX			
Q704	8-729-026-53	TRANSISTOR	2SA1576A-T106-QR			
		< RESISTOR >				
R101	1-216-298-00	METAL CHIP	2.2	5%	1/10W	
R102	1-219-724-11	METAL CHIP	1	1%	1/4W	
R103	1-216-829-11	METAL CHIP	4.7K	5%	1/16W	
R104	1-216-853-11	METAL CHIP	470K	5%	1/16W	
R105	1-216-863-11	METAL CHIP	3.3M	5%	1/10W	
R106	1-216-845-11	METAL CHIP	100K	5%	1/16W	
R107	1-216-819-11	METAL CHIP	680	5%	1/16W	
R108	1-216-825-11	METAL CHIP	2.2K	5%	1/16W	
R109	1-216-829-11	METAL CHIP	4.7K	5%	1/16W	
R110	1-216-853-11	METAL CHIP	470K	5%	1/16W	
R111	1-216-833-11	METAL CHIP	10K	5%	1/16W	
R112	1-216-845-11	METAL CHIP	100K	5%	1/16W	
R113	1-216-833-11	METAL CHIP	10K	5%	1/16W	
R114	1-216-829-11	METAL CHIP	4.7K	5%	1/16W	
R115	1-216-833-11	METAL CHIP	10K	5%	1/16W	
R116	1-216-827-11	METAL CHIP	3.3K	5%	1/16W	
R117	1-216-845-11	METAL CHIP	100K	5%	1/16W	
R118	1-216-825-11	METAL CHIP	2.2K	5%	1/16W	
R119	1-216-837-11	METAL CHIP	22K	5%	1/16W	
R120	1-216-839-11	METAL CHIP	33K	5%	1/16W	
R121	1-216-825-11	METAL CHIP	2.2K	5%	1/16W	
R122	1-216-833-11	METAL CHIP	10K	5%	1/16W	
R178	1-216-809-11	METAL CHIP	100	5%	1/16W	
R201	1-216-815-11	METAL CHIP	330	5%	1/16W	
R202	1-216-819-11	METAL CHIP	680	5%	1/16W	
R203	1-216-809-11	METAL CHIP	100	5%	1/16W	
R205	1-216-833-11	METAL CHIP	10K	5%	1/16W	
R206	1-216-833-11	METAL CHIP	10K	5%	1/16W	
R207	1-216-811-11	METAL CHIP	150	5%	1/16W	
R208	1-216-821-11	METAL CHIP	1K	5%	1/16W	
R209	1-216-815-11	METAL CHIP	330	5%	1/16W	
R210	1-216-839-11	METAL CHIP	33K	5%	1/16W	
R211	1-216-857-11	METAL CHIP	1M	5%	1/16W	
R212	1-216-851-11	METAL CHIP	330K	5%	1/16W	
R214	1-216-845-11	METAL CHIP	100K	5%	1/16W	
R216	1-216-864-11	METAL CHIP	0	5%	1/16W	
R217	1-216-833-11	METAL CHIP	10K	5%	1/16W	
R218	1-216-864-11	METAL CHIP	0	5%	1/16W	
R219	1-216-809-11	METAL CHIP	100	5%	1/16W	
R223	1-216-833-11	METAL CHIP	10K	5%	1/16W	
R227	1-414-760-21	FERRITE	0uH			
R280	1-216-821-11	METAL CHIP	1K	5%	1/16W	
R298	1-216-809-11	METAL CHIP	100	5%	1/16W	
R299	1-216-864-11	METAL CHIP	0	5%	1/16W	
R301	1-216-833-11	METAL CHIP	10K	5%	1/16W	
R302	1-216-833-11	METAL CHIP	10K	5%	1/16W	
R303	1-216-833-11	METAL CHIP	10K	5%	1/16W	
R501	1-216-295-91	SHORT CHIP	0			
R551	1-216-841-11	METAL CHIP	47K	5%	1/16W	
R552	1-216-841-11	METAL CHIP	47K	5%	1/16W	
R553	1-216-841-11	METAL CHIP	47K	5%	1/16W	
R701	1-216-821-11	METAL CHIP	1K	5%	1/16W	
R702	1-216-821-11	METAL CHIP	1K	5%	1/16W	
R703	1-216-821-11	METAL CHIP	1K	5%	1/16W	
R704	1-216-839-11	METAL CHIP	33K	5%	1/16W	
R705	1-216-829-11	METAL CHIP	4.7K	5%	1/16W	
R706	1-218-855-11	METAL CHIP	2.2K	0.5%	1/10W	
R707	1-218-863-11	METAL CHIP	4.7K	0.5%	1/10W	
R708	1-218-863-11	METAL CHIP	4.7K	0.5%	1/10W	
R709	1-218-855-11	METAL CHIP	2.2K	0.5%	1/10W	

☆ IC195 is a written in and settled EEPROM. Supply with a single article has not been carried out. In case you exchange by BD board (A-4731-095-A), please put on IC195 currently used with the model again.

Ref. No.	Part No.	Description			Remarks
R710	1-218-887-11	METAL CHIP	47K	0.5%	1/10W
R711	1-216-833-11	METAL CHIP	10K	5%	1/16W
R712	1-216-809-11	METAL CHIP	100	5%	1/16W
R713	1-216-833-11	METAL CHIP	10K	5%	1/16W
R801	1-216-857-11	METAL CHIP	1M	5%	1/16W
R803	1-216-864-11	METAL CHIP	0	5%	1/16W
R805	1-216-807-11	METAL CHIP	68	5%	1/16W
R810	1-216-823-11	METAL CHIP	1.5K	5%	1/16W
R812	1-216-864-11	METAL CHIP	0	5%	1/16W
R814	1-216-864-11	METAL CHIP	0	5%	1/16W
R999	1-216-864-11	METAL CHIP	0	5%	1/16W
		< SWITCH >			
S101	1-762-596-21	SWITCH, PUSH (1 KEY)(LIMIT-IN)			
S103	1-771-956-21	SWITCH, PUSH (1 KEY)(OUT)			
S104	1-771-955-21	SWITCH, PUSH (1 KEY)(PLAY)			
S105	1-771-955-21	SWITCH, PUSH (1 KEY)(REC)			
		< VIBRATOR >			
X804	1-795-535-21	VIBRATOR, CRYSTAL (11.2896MHz)			

****

	A-4732-542-A	MAIN BOARD, COMPLETE			
		**********			
		< CAPACITOR >			
C101	1-126-940-11	ELECT	330uF	20.00%	25V
C102	1-164-156-11	CERAMIC CHIP	0.1uF		25V
C103	1-128-942-31	ELECT	1000uF	20%	6.3V
C105	1-126-923-91	ELECT	220uF	20.00%	10V
C106	1-126-916-11	ELECT	1000uF	20.00%	6.3V
C107	1-104-656-11	ELECT	2200uF	20.00%	6.3V
C111	1-104-665-11	ELECT	100uF	20.00%	25V
C112	1-126-925-91	ELECT	470uF	20.00%	10V
C121	1-126-947-11	ELECT	47uF	20.00%	10V
C122	1-164-156-11	CERAMIC CHIP	0.1uF		25V
C123	1-164-156-11	CERAMIC CHIP	0.1uF		25V
C151	1-164-227-11	CERAMIC CHIP	0.022uF	10%	25V
C152	1-164-227-11	CERAMIC CHIP	0.022uF	10%	25V
C153	1-164-227-11	CERAMIC CHIP	0.022uF	10%	25V
C155	1-164-156-11	CERAMIC CHIP	0.1uF		25V
C156	1-164-156-11	CERAMIC CHIP	0.1uF		25V
C157	1-164-156-11	CERAMIC CHIP	0.1uF		25V
C201	1-126-176-11	ELECT	220uF	20%	10V
C204	1-124-261-00	ELECT	10uF	20%	50V
C205	1-124-261-00	ELECT	10uF	20%	50V
C206	1-124-261-00	ELECT	10uF	20%	50V
C207	1-126-160-11	ELECT	1uF	20%	50V
C211	1-124-589-11	ELECT	47uF	20%	16V
C212	1-130-483-00	MYLAR	0.01uF	5%	50V
C214	1-124-261-00	ELECT	10uF	20%	50V
C215	1-126-160-11	ELECT	1uF	20%	50V
C216	1-162-962-11	CERAMIC CHIP	470PF	10%	50V
C217	1-124-257-00	ELECT	2.2uF	20%	50V
C218	1-126-163-11	ELECT	4.7uF	20%	50V
C219	1-126-163-11	ELECT	4.7uF	20%	50V
C220	1-164-156-11	CERAMIC CHIP	0.1uF		25V
C242	1-130-483-00	MYLAR	0.01uF	5%	50V
C243	1-162-961-11	CERAMIC CHIP	330PF	10%	50V
C244	1-162-928-11	CERAMIC CHIP	120PF	5%	50V
C245	1-162-920-11	CERAMIC CHIP	27PF	5%	50V
C246	1-164-392-11	CERAMIC CHIP	390PF	10.00%	50V
C252	1-124-234-00	ELECT	22uF	20%	16V
C253	1-124-261-00	ELECT	10uF	20%	50V
C254	1-130-486-00	MYLAR	0.018uF	10%	50V
C255	1-130-481-00	MYLAR	0.0068uF	5%	50V
C256	1-130-481-00	MYLAR	0.0068uF	5%	50V
C257	1-130-485-00	MYLAR	0.015uF	5%	50V
C258	1-124-257-00	ELECT	2.2uF	20%	50V
C259	1-137-150-11	MYLAR	0.01uF	5.00%	100V
C261	1-124-589-11	ELECT	47uF	20%	16V
C262	1-130-483-00	MYLAR	0.01uF	5%	50V
C264	1-124-261-00	ELECT	10uF	20%	50V
C265	1-126-160-11	ELECT	1uF	20%	50V
C266	1-162-962-11	CERAMIC CHIP	470PF	10%	50V
C267	1-124-257-00	ELECT	2.2uF	20%	50V
C268	1-126-163-11	ELECT	4.7uF	20%	50V
C269	1-126-163-11	ELECT	4.7uF	20%	50V
C270	1-164-156-11	CERAMIC CHIP	0.1uF		25V
C292	1-130-483-00	MYLAR	0.01uF	5%	50V
C293	1-162-961-11	CERAMIC CHIP	330PF	10%	50V
C294	1-162-928-11	CERAMIC CHIP	120PF	5%	50V
C295	1-162-920-11	CERAMIC CHIP	27PF	5%	50V
C296	1-164-392-11	CERAMIC CHIP	390PF	10.00%	50V
C301	1-126-934-11	ELECT	220uF	20.00%	16V
C302	1-164-227-11	CERAMIC CHIP	0.022uF	10%	25V
C303	1-164-227-11	CERAMIC CHIP	0.022uF	10%	25V
C321	1-126-767-11	ELECT	1000uF	20.00%	16V
C322	1-162-968-11	CERAMIC CHIP	0.0047uF	10%	50V
C324	1-164-227-11	CERAMIC CHIP	0.022uF	10%	25V
C325	1-164-227-11	CERAMIC CHIP	0.022uF	10%	25V
C326	1-164-156-11	CERAMIC CHIP	0.1uF		25V
C401	1-162-966-11	CERAMIC CHIP	0.0022uF	10%	50V
C402	1-126-963-11	ELECT	4.7uF	20.00%	50V
C403	1-126-963-11	ELECT	4.7uF	20.00%	50V
C404	1-162-964-11	CERAMIC CHIP	0.001uF	10%	50V
C421	1-126-925-91	ELECT	470uF	20.00%	10V
C422	1-164-227-11	CERAMIC CHIP	0.022uF	10%	25V
C423	1-126-947-11	ELECT	47uF	20.00%	10V
C424	1-164-227-11	CERAMIC CHIP	0.022uF	10%	25V
C425	1-164-227-11	CERAMIC CHIP	0.022uF	10%	25V
C431	1-162-964-11	CERAMIC CHIP	0.001uF	10%	50V
C432	1-126-947-11	ELECT	47uF	20.00%	16V
C435	1-162-923-11	CERAMIC CHIP	47PF	5%	50V
C436	1-162-923-11	CERAMIC CHIP	47PF	5%	50V
C441	1-104-658-91	ELECT	100uF	20.00%	10V
C442	1-107-826-11	CERAMIC CHIP	0.1uF	10.00%	16V
C443	1-104-658-91	ELECT	100uF	20.00%	10V
C444	1-107-826-11	CERAMIC CHIP	0.1uF	10.00%	16V
C451	1-162-966-11	CERAMIC CHIP	0.0022uF	10%	50V
C452	1-126-963-11	ELECT	4.7uF	20.00%	50V
C453	1-126-963-11	ELECT	4.7uF	20.00%	50V
C454	1-162-964-11	CERAMIC CHIP	0.001uF	10%	50V
C501	1-128-057-11	ELECT	330uF	20.00%	6.3V
C502	1-162-964-11	CERAMIC CHIP	0.001uF	10%	50V
C503	1-128-057-11	ELECT	330uF	20.00%	6.3V

MAIN

Ref. No.	Part No.	Description			Remarks
C504	1-162-964-11	CERAMIC CHIP	0.001uF	10%	50V
C505	1-128-057-11	ELECT	330uF	20.00%	6.3V
C506	1-162-964-11	CERAMIC CHIP	0.001uF	10%	50V
C507	1-128-057-11	ELECT	330uF	20.00%	6.3V
C508	1-162-964-11	CERAMIC CHIP	0.001uF	10%	50V
C509	1-128-057-11	ELECT	330uF	20.00%	6.3V
C510	1-162-964-11	CERAMIC CHIP	0.001uF	10%	50V
C521	1-126-163-11	ELECT	4.7uF	20%	50V
C522	1-126-163-11	ELECT	4.7uF	20%	50V
C523	1-126-163-11	ELECT	4.7uF	20%	50V
C571	1-126-163-11	ELECT	4.7uF	20%	50V
C572	1-126-163-11	ELECT	4.7uF	20%	50V
C573	1-126-163-11	ELECT	4.7uF	20%	50V
		< CONNECTOR >			
CN101	1-770-409-11	CONNECTOR, BOARD TO BOARD 16P			
CN151	1-785-321-11	PIN, CONNECTOR (STRAIGHT) 9P			
CN181	1-784-735-11	CONNECTOR, FFC 13P			
* CN201	1-564-724-11	PIN, CONNECTOR (SMALL TYPE) 8P			
CN301	1-784-922-11	PIN, CONNECTOR 5P			
CN321	1-695-371-31	CONNECTOR, FFC 10P			
CN431	1-817-364-11	PIN, CONNECTOR 7P (SYSTEM CONTROL)			
CN501	1-784-786-11	CONNECTOR, FFC 25P			
CN502	1-784-921-11	PIN, CONNECTOR 4P			
		< DIODE >			
D101	8-719-210-39	DIODE EC10QS04-TE12L5			
D102	8-719-988-61	DIODE 1SS355TE-17			
D103	6-500-522-21	DIODE 10EDB40-TB3			
D104	8-719-988-61	DIODE 1SS355TE-17			
D105	8-719-988-61	DIODE 1SS355TE-17			
D106	6-500-522-21	DIODE 10EDB40-TB3			
D121	8-719-988-61	DIODE 1SS355TE-17			
D122	8-719-988-61	DIODE 1SS355TE-17			
D201	6-500-522-21	DIODE 10EDB40-TB3			
D321	8-719-988-61	DIODE 1SS355TE-17			
D322	8-719-988-61	DIODE 1SS355TE-17			
D431	8-719-069-56	DIODE UDZSTE-176.2B			
D432	8-719-069-56	DIODE UDZSTE-176.2B			
D433	8-719-988-61	DIODE 1SS355TE-17			
D434	8-719-988-61	DIODE 1SS355TE-17			
D435	8-719-988-61	DIODE 1SS355TE-17			
D436	8-719-988-61	DIODE 1SS355TE-17			
		< FERRITE BEAD >			
FB431	1-216-295-91	SHORT CHIP	0		
FB432	1-216-295-91	SHORT CHIP	0		
FB433	1-216-295-91	SHORT CHIP	0		
FB441	1-216-295-91	SHORT CHIP	0		
		< IC >			
IC101	6-700-812-01	IC SI-8050JF			
IC102	8-759-686-72	IC uPC29L04J-T			
IC111	8-759-394-36	IC BA09T			
IC121	8-759-635-63	IC M51943BSL-TP			
IC151	6-803-105-01	IC M38514M6-C12FP			
IC201	6-702-130-01	IC HA12237F			
IC202	8-759-508-69	IC BA3126N			
IC301	8-759-598-69	IC BA6956AN			
IC401	8-759-385-76	IC MC14052 BDR2			
IC402	8-759-358-47	IC NJM2115V (TE2)			
IC403	8-759-337-40	IC NJM2904V (TE2)			
IC441	6-600-013-01	IC TORX179L (DIGITAL IN OPTICAL C)			
IC442	6-600-011-01	IC TOTX179L (DIGITAL OUT OPTICAL D)			
		< JACK >			
J401	1-794-793-11	JACK, PIN 4P (MD/TAPE)			
		< JUMPER RESISTOR >			
JW501	1-216-864-11	METAL CHIP	0	5%	1/16W
JW502	1-216-864-11	METAL CHIP	0	5%	1/16W
		< COIL >			
L101	1-456-214-11	COIL, CHOPPER	100uH		
L241	1-410-780-11	INDUCTOR	27mH		
L251	1-216-295-91	SHORT CHIP	0		
L252	1-216-295-91	SHORT CHIP	0		
L291	1-410-780-11	INDUCTOR	27mH		
L501	1-216-295-91	SHORT CHIP	0		
L502	1-216-295-91	SHORT CHIP	0		
L503	1-216-295-91	SHORT CHIP	0		
		< TRANSISTOR >			
Q121	8-729-120-28	TRANSISTOR	2SC1623-T1-L5L6		
Q251	8-729-119-77	TRANSISTOR	2SA1175TP-FEK		
Q252	8-729-027-43	TRANSISTOR	DTC114EKA-T146		
Q253	8-729-801-93	TRANSISTOR	2SD1387-34-TP		
Q254	8-729-142-46	TRANSISTOR	2SC2001TP-LK		
Q255	8-729-142-46	TRANSISTOR	2SC2001TP-LK		
Q321	8-729-027-43	TRANSISTOR	DTC114EKA-T146		
Q322	8-729-116-57	TRANSISTOR	2SB1068TP-K		
Q323	8-729-027-43	TRANSISTOR	DTC114EKA-T146		
Q324	8-729-140-04	TRANSISTOR	2SB1116A-TP-LK		
Q421	8-729-027-43	TRANSISTOR	DTC114EKA-T146		
Q422	8-729-027-43	TRANSISTOR	DTC114EKA-T146		
Q431	8-729-025-28	TRANSISTOR	2SK1828TE85L		
Q432	8-729-025-28	TRANSISTOR	2SK1828TE85L		
		< RESISTOR >			
R102	1-216-810-11	METAL CHIP	120	5%	1/16W
R103	1-216-864-11	METAL CHIP	0	5%	1/16W
R105	1-216-821-11	METAL CHIP	1K	5%	1/16W
R121	1-216-817-11	METAL CHIP	470	5%	1/16W
R122	1-216-829-11	METAL CHIP	4.7K	5%	1/16W
R124	1-216-841-11	METAL CHIP	47K	5%	1/16W
R125	1-216-841-11	METAL CHIP	47K	5%	1/16W
R126	1-216-833-11	METAL CHIP	10K	5%	1/16W
R151	1-216-809-11	METAL CHIP	100	5%	1/16W
R152	1-216-809-11	METAL CHIP	100	5%	1/16W
R153	1-216-841-11	METAL CHIP	47K	5%	1/16W
R154	1-216-833-11	METAL CHIP	10K	5%	1/16W
R155	1-216-825-11	METAL CHIP	2.2K	5%	1/16W
R156	1-216-809-11	METAL CHIP	100	5%	1/16W
R157	1-216-809-11	METAL CHIP	100	5%	1/16W
R158	1-216-833-11	METAL CHIP	10K	5%	1/16W

Ref. No.	Part No.	Description			Remarks
R159	1-216-829-11	METAL CHIP	4.7K	5%	1/16W
R160	1-216-809-11	METAL CHIP	100	5%	1/16W
R161	1-216-809-11	METAL CHIP	100	5%	1/16W
R162	1-216-809-11	METAL CHIP	100	5%	1/16W
R163	1-216-809-11	METAL CHIP	100	5%	1/16W
R164	1-216-833-11	METAL CHIP	10K	5%	1/16W
R165	1-216-833-11	METAL CHIP	10K	5%	1/16W
R166	1-216-833-11	METAL CHIP	10K	5%	1/16W
R167	1-216-833-11	METAL CHIP	10K	5%	1/16W
R168	1-216-821-11	METAL CHIP	1K	5%	1/16W
R169	1-216-833-11	METAL CHIP	10K	5%	1/16W
R170	1-216-821-11	METAL CHIP	1K	5%	1/16W
R171	1-216-833-11	METAL CHIP	10K	5%	1/16W
R172	1-216-821-11	METAL CHIP	1K	5%	1/16W
R173	1-216-833-11	METAL CHIP	10K	5%	1/16W
R174	1-216-827-11	METAL CHIP	3.3K	5%	1/16W
R181	1-216-809-11	METAL CHIP	100	5%	1/16W
R182	1-216-809-11	METAL CHIP	100	5%	1/16W
R183	1-216-809-11	METAL CHIP	100	5%	1/16W
R201	1-216-857-11	METAL CHIP	1M	5%	1/16W
R202	1-216-809-11	METAL CHIP	100	5%	1/16W
R203	1-216-821-11	METAL CHIP	1K	5%	1/16W
R204	1-216-821-11	METAL CHIP	1K	5%	1/16W
R205	1-216-837-11	METAL CHIP	22K	5%	1/16W
R206	1-216-837-11	METAL CHIP	22K	5%	1/16W
R211	1-216-827-11	METAL CHIP	3.3K	5%	1/16W
R212	1-216-827-11	METAL CHIP	3.3K	5%	1/16W
R213	1-218-867-11	METAL CHIP	6.8K	5%	1/10W
R214	1-216-833-11	METAL CHIP	10K	5%	1/16W
R215	1-216-825-11	METAL CHIP	2.2K	5%	1/16W
R216	1-216-839-11	METAL CHIP	33K	5%	1/16W
R217	1-218-867-11	METAL CHIP	6.8K	5%	1/10W
R241	1-216-841-11	METAL CHIP	47K	5%	1/16W
R242	1-216-825-11	METAL CHIP	2.2K	5%	1/16W
R243	1-216-833-11	METAL CHIP	10K	5%	1/16W
R244	1-216-832-11	METAL CHIP	8.2K	5%	1/16W
R245	1-216-864-11	METAL CHIP	0	5%	1/16W
R251	1-216-837-11	METAL CHIP	22K	5%	1/16W
R252	1-216-825-11	METAL CHIP	2.2K	5%	1/16W
R253	1-216-821-11	METAL CHIP	1K	5%	1/16W
R254	1-216-825-11	METAL CHIP	2.2K	5%	1/16W
R255	1-218-867-11	METAL CHIP	6.8K	5%	1/10W
R256	1-216-836-11	METAL CHIP	18K	5%	1/16W
R257	1-216-836-11	METAL CHIP	18K	5%	1/16W
⚠R258	1-219-787-17	FUSIBLE	5.6	5%	1/4W
⚠R259	1-219-787-17	FUSIBLE	5.6	5%	1/4W
R261	1-216-827-11	METAL CHIP	3.3K	5%	1/16W
R262	1-216-827-11	METAL CHIP	3.3K	5%	1/16W
R263	1-218-867-11	METAL CHIP	6.8K	5%	1/10W
R264	1-216-833-11	METAL CHIP	10K	5%	1/16W
R265	1-216-825-11	METAL CHIP	2.2K	5%	1/16W
R266	1-216-839-11	METAL CHIP	33K	5%	1/16W
R267	1-218-867-11	METAL CHIP	6.8K	5%	1/10W
R291	1-216-841-11	METAL CHIP	47K	5%	1/16W
R292	1-216-825-11	METAL CHIP	2.2K	5%	1/16W
R293	1-216-833-11	METAL CHIP	10K	5%	1/16W
R294	1-216-832-11	METAL CHIP	8.2K	5%	1/16W
R295	1-216-864-11	METAL CHIP	0	5%	1/16W

Ref. No.	Part No.	Description			Remarks
R301	1-216-821-11	METAL CHIP	1K	5%	1/16W
R302	1-216-827-11	METAL CHIP	3.3K	5%	1/16W
R321	1-216-841-11	METAL CHIP	47K	5%	1/16W
R322	1-216-825-11	METAL CHIP	2.2K	5%	1/16W
R323	1-216-819-11	METAL CHIP	680	5%	1/16W
R324	1-249-413-11	CARBON	470	5%	1/4W
R325	1-216-817-11	METAL CHIP	470	5%	1/16W
R326	1-216-837-11	METAL CHIP	22K	5%	1/16W
R327	1-216-833-11	METAL CHIP	10K	5%	1/16W
R328	1-216-825-11	METAL CHIP	2.2K	5%	1/16W
R329	1-216-825-11	METAL CHIP	2.2K	5%	1/16W
R330	1-216-825-11	METAL CHIP	2.2K	5%	1/16W
R401	1-216-821-11	METAL CHIP	1K	5%	1/16W
R402	1-216-845-11	METAL CHIP	100K	5%	1/16W
R403	1-216-821-11	METAL CHIP	1K	5%	1/16W
R404	1-216-845-11	METAL CHIP	100K	5%	1/16W
R405	1-216-841-11	METAL CHIP	47K	5%	1/16W
R406	1-216-841-11	METAL CHIP	47K	5%	1/16W
R407	1-216-841-11	METAL CHIP	47K	5%	1/16W
R408	1-216-841-11	METAL CHIP	47K	5%	1/16W
R409	1-216-841-11	METAL CHIP	47K	5%	1/16W
R410	1-216-864-11	METAL CHIP	0	5%	1/16W
R412	1-216-841-11	METAL CHIP	47K	5%	1/16W
R413	1-216-841-11	METAL CHIP	47K	5%	1/16W
R421	1-216-829-11	METAL CHIP	4.7K	5%	1/16W
R422	1-216-829-11	METAL CHIP	4.7K	5%	1/16W
R423	1-216-821-11	METAL CHIP	1K	5%	1/16W
R424	1-216-821-11	METAL CHIP	1K	5%	1/16W
R431	1-216-829-11	METAL CHIP	4.7K	5%	1/16W
R432	1-216-829-11	METAL CHIP	4.7K	5%	1/16W
R433	1-216-864-11	METAL CHIP	0	5%	1/16W
R434	1-216-864-11	METAL CHIP	0	5%	1/16W
R435	1-216-821-11	METAL CHIP	1K	5%	1/16W
R436	1-216-833-11	METAL CHIP	10K	5%	1/16W
R437	1-216-845-11	METAL CHIP	100K	5%	1/16W
R438	1-216-864-11	METAL CHIP	0	5%	1/16W
R441	1-216-809-11	METAL CHIP	100	5%	1/16W
R442	1-216-864-11	METAL CHIP	0	5%	1/16W
R451	1-216-821-11	METAL CHIP	1K	5%	1/16W
R452	1-216-845-11	METAL CHIP	100K	5%	1/16W
R453	1-216-821-11	METAL CHIP	1K	5%	1/16W
R454	1-216-845-11	METAL CHIP	100K	5%	1/16W
R455	1-216-841-11	METAL CHIP	47K	5%	1/16W
R456	1-216-841-11	METAL CHIP	47K	5%	1/16W
R457	1-216-841-11	METAL CHIP	47K	5%	1/16W
R458	1-216-841-11	METAL CHIP	47K	5%	1/16W
R459	1-216-841-11	METAL CHIP	47K	5%	1/16W
R460	1-216-864-11	METAL CHIP	0	5%	1/16W
R462	1-216-841-11	METAL CHIP	47K	5%	1/16W
R463	1-216-841-11	METAL CHIP	47K	5%	1/16W
R521	1-216-833-11	METAL CHIP	10K	5%	1/16W
R522	1-216-823-11	METAL CHIP	1.5K	5%	1/16W
R571	1-216-833-11	METAL CHIP	10K	5%	1/16W
R572	1-216-823-11	METAL CHIP	1.5K	5%	1/16W
		< VARIABLE RESISTOR >			
RV241	1-241-768-11	RES, ADJ, CARBON 220K			

The components identified by mark ⚠ or dotted line with mark ⚠ are critical for safety.
Replace only with part number specified.

MAIN **MD**

Ref. No.	Part No.	Description			Remarks
RV291	1-241-768-11	RES, ADJ, CARBON 220K			
RV321	1-241-761-11	RES, ADJ, CARBON 1K			
		< TRANSFORMER >			
T201	1-423-980-11	TRANSFORMER, BIAS OSCILLATION			
		< THERMISTOR (POSITIVE) >			
THP101	1-804-234-21	THERMISTOR, POSITIVE			
		< VIBRATOR >			
X151	1-579-125-11	VIBRATOR, CERAMIC (8MHz)			

****

	A-4732-551-A	MD BOARD, COMPLETE			
		**********			
		< CAPACITOR >			
C702	1-162-974-11	CERAMIC CHIP	0.01uF		50V
C703	1-162-974-11	CERAMIC CHIP	0.01uF		50V
C704	1-162-974-11	CERAMIC CHIP	0.01uF		50V
C705	1-126-206-11	ELECT CHIP	100uF	20%	6.3V
C706	1-164-360-11	CERAMIC CHIP	0.1uF		16V
C711	1-126-206-11	ELECT CHIP	100uF	20%	6.3V
C712	1-164-360-11	CERAMIC CHIP	0.1uF		16V
C713	1-164-360-11	CERAMIC CHIP	0.1uF		16V
C714	1-126-206-11	ELECT CHIP	100uF	20%	6.3V
C716	1-164-360-11	CERAMIC CHIP	0.1uF		16V
C719	1-162-927-11	CERAMIC CHIP	100PF	5%	50V
C720	1-162-927-11	CERAMIC CHIP	100PF	5%	50V
C721	1-162-927-11	CERAMIC CHIP	100PF	5%	50V
C722	1-164-360-11	CERAMIC CHIP	0.1uF		16V
C724	1-124-779-00	ELECT CHIP	10uF	20%	16V
C725	1-164-360-11	CERAMIC CHIP	0.1uF		16V
C726	1-164-360-11	CERAMIC CHIP	0.1uF		16V
C727	1-164-360-11	CERAMIC CHIP	0.1uF		16V
C730	1-164-360-11	CERAMIC CHIP	0.1uF		16V
C731	1-126-209-11	ELECT CHIP	100uF	20.00%	4V
C732	1-164-360-11	CERAMIC CHIP	0.1uF		16V
C733	1-162-927-11	CERAMIC CHIP	100PF	5%	50V
C734	1-162-927-11	CERAMIC CHIP	100PF	5%	50V
C735	1-162-927-11	CERAMIC CHIP	100PF	5%	50V
C736	1-162-927-11	CERAMIC CHIP	100PF	5%	50V
C737	1-162-974-11	CERAMIC CHIP	0.01uF		50V
C738	1-164-360-11	CERAMIC CHIP	0.1uF		16V
C739	1-107-726-91	CERAMIC CHIP	0.01uF	10.00%	16V
C741	1-164-360-11	CERAMIC CHIP	0.1uF		16V
C742	1-128-934-91	CERAMIC CHIP	0.33uF	20%	10V
C743	1-164-360-11	CERAMIC CHIP	0.1uF		16V
C745	1-164-360-11	CERAMIC CHIP	0.1uF		16V
C749	1-164-360-11	CERAMIC CHIP	0.1uF		16V
C750	1-124-779-00	ELECT CHIP	10uF	20%	16V
C751	1-126-205-11	ELECT CHIP	47uF	20%	6.3V
C752	1-164-360-11	CERAMIC CHIP	0.1uF		16V
C753	1-164-360-11	CERAMIC CHIP	0.1uF		16V
C754	1-164-360-11	CERAMIC CHIP	0.1uF		16V
C757	1-164-360-11	CERAMIC CHIP	0.1uF		16V
C758	1-126-208-21	ELECT CHIP	47uF	20.00%	4V
C759	1-164-360-11	CERAMIC CHIP	0.1uF		16V
C762	1-164-360-11	CERAMIC CHIP	0.1uF		16V
C763	1-164-360-11	CERAMIC CHIP	0.1uF		16V
C764	1-164-360-11	CERAMIC CHIP	0.1uF		16V
C765	1-126-208-21	ELECT CHIP	47uF	20.00%	4V
C766	1-164-360-11	CERAMIC CHIP	0.1uF		16V
C768	1-164-360-11	CERAMIC CHIP	0.1uF		16V
C770	1-162-919-11	CERAMIC CHIP	22PF	5%	50V
C771	1-162-919-11	CERAMIC CHIP	22PF	5%	50V
C772	1-162-974-11	CERAMIC CHIP	0.01uF		50V
C781	1-126-205-11	ELECT CHIP	47uF	20%	6.3V
C791	1-124-779-00	ELECT CHIP	10uF	20%	16V
C792	1-164-360-11	CERAMIC CHIP	0.1uF		16V
C794	1-164-360-11	CERAMIC CHIP	0.1uF		16V
C796	1-164-360-11	CERAMIC CHIP	0.1uF		16V
C797	1-164-360-11	CERAMIC CHIP	0.1uF		16V
		< CONNECTOR >			
CN701	1-784-835-21	CONNECTOR, FFC (LIF (NON-ZIF)) 27P			
CN702	1-784-869-21	CONNECTOR, FFC (LIF (NON-ZIF)) 17P			
CN703	1-793-311-11	CONNECTOR, FFC (LIF (NON-ZIF)) 25P			
CN704	1-750-499-21	PIN, CONNECTOR (PC BOARD) 5P			
CN705	1-750-498-11	PIN, CONNECTOR (PC BOARD) 4P			
		< DIODE >			
D701	8-719-988-61	DIODE 1SS355TE-17			
D702	8-719-988-61	DIODE 1SS355TE-17			
D703	8-719-988-61	DIODE 1SS355TE-17			
D704	8-719-988-61	DIODE 1SS355TE-17			
D751	8-719-210-33	DIODE EC10DS2TE12L			
		< FERRITE BEAD >			
FB701	1-216-295-91	SHORT CHIP	0		
FB703	1-500-445-21	FERRITE	0uH		
FB704	1-500-445-21	FERRITE	0uH		
FB705	1-500-445-21	FERRITE	0uH		
FB706	1-216-295-91	SHORT CHIP	0		
FB751	1-216-864-11	METAL CHIP	0	5%	1/16W
FB786	1-216-295-91	SHORT CHIP	0		
FB787	1-216-295-91	SHORT CHIP	0		
FB788	1-216-295-91	SHORT CHIP	0		
		< IC >			
IC701	6-701-843-01	IC AK4584VQ			
IC702	6-804-108-01	IC M3062VMWP-A28GP			
IC703	6-802-985-01	IC MB89051PFM-101-BNDE1			
IC705	8-752-418-43	IC CXD1875TQ			
IC706	6-703-044-01	IC PCM2903EG/2K			
IC721	8-759-565-74	IC M62016FP-E1			
IC722	8-759-598-42	IC TC7WH00FK (TE85R)			
IC751	6-701-680-01	IC PST3629NR			
IC752	8-759-591-61	IC TC7WHU04FU (TE12R)			
IC781	8-759-481-19	IC LB1830M-S-TE-L			
		< COIL >			
L781	1-416-670-11	INDUCTOR	33uH		

Ref. No.	Part No.	Description			Remarks
		< LINE FILTER >			
LF781	1-419-521-21	INDUCTOR	0uH		
		< TRANSISTOR >			
Q721	8-729-120-28	TRANSISTOR	2SC1623-T1-L5L6		
Q751	8-729-907-00	TRANSISTOR	DTC114EUA-T106		
Q752	8-729-907-00	TRANSISTOR	DTC114EUA-T106		
Q781	8-729-907-00	TRANSISTOR	DTC114EUA-T106		
		< RESISTOR >			
R701	1-216-809-11	METAL CHIP	100	5%	1/16W
R702	1-216-809-11	METAL CHIP	100	5%	1/16W
R703	1-216-817-11	METAL CHIP	470	5%	1/16W
R704	1-216-821-11	METAL CHIP	1K	5%	1/16W
R705	1-216-809-11	METAL CHIP	100	5%	1/16W
R706	1-216-809-11	METAL CHIP	100	5%	1/16W
R707	1-218-874-11	METAL CHIP	13K	0.5%	1/10W
R708	1-216-809-11	METAL CHIP	100	5%	1/16W
R709	1-216-809-11	METAL CHIP	100	5%	1/16W
R710	1-216-793-11	METAL CHIP	4.7	5%	1/10W
R712	1-216-793-11	METAL CHIP	4.7	5%	1/10W
R713	1-216-822-11	METAL CHIP	1.2K	5%	1/16W
R714	1-216-823-11	METAL CHIP	1.5K	5%	1/16W
R715	1-216-821-11	METAL CHIP	1K	5%	1/16W
R716	1-216-864-11	METAL CHIP	0	5%	1/16W
R717	1-216-864-11	METAL CHIP	0	5%	1/16W
R718	1-216-864-11	METAL CHIP	0	5%	1/16W
R719	1-216-809-11	METAL CHIP	100	5%	1/16W
R721	1-216-864-11	METAL CHIP	0	5%	1/16W
R722	1-216-864-11	METAL CHIP	0	5%	1/16W
R725	1-216-833-11	METAL CHIP	10K	5%	1/16W
R726	1-216-833-11	METAL CHIP	10K	5%	1/16W
R728	1-216-833-11	METAL CHIP	10K	5%	1/16W
R730	1-216-864-11	METAL CHIP	0	5%	1/16W
R734	1-216-801-11	METAL CHIP	22	5%	1/16W
R735	1-216-801-11	METAL CHIP	22	5%	1/16W
R736	1-216-813-11	METAL CHIP	220	5%	1/16W
R737	1-216-813-11	METAL CHIP	220	5%	1/16W
R740	1-216-833-11	METAL CHIP	10K	5%	1/16W
R741	1-216-833-11	METAL CHIP	10K	5%	1/16W
R742	1-216-833-11	METAL CHIP	10K	5%	1/16W
R743	1-216-813-11	METAL CHIP	220	5%	1/16W
R744	1-216-833-11	METAL CHIP	10K	5%	1/16W
R745	1-216-833-11	METAL CHIP	10K	5%	1/16W
R746	1-216-833-11	METAL CHIP	10K	5%	1/16W
R747	1-216-837-11	METAL CHIP	22K	5%	1/16W
R748	1-216-845-11	METAL CHIP	100K	5%	1/16W
R749	1-216-849-11	METAL CHIP	220K	5%	1/16W
R752	1-216-801-11	METAL CHIP	22	5%	1/16W
R753	1-216-801-11	METAL CHIP	22	5%	1/16W
R755	1-216-864-11	METAL CHIP	0	5%	1/16W
R757	1-216-833-11	METAL CHIP	10K	5%	1/16W
R760	1-216-809-11	METAL CHIP	100	5%	1/16W
R763	1-216-823-11	METAL CHIP	1.5K	5%	1/16W
R766	1-216-823-11	METAL CHIP	1.5K	5%	1/16W
R767	1-216-835-11	METAL CHIP	15K	5%	1/16W
R768	1-216-835-11	METAL CHIP	15K	5%	1/16W
R769	1-216-835-11	METAL CHIP	15K	5%	1/16W
R770	1-216-835-11	METAL CHIP	15K	5%	1/16W
R771	1-216-833-11	METAL CHIP	10K	5%	1/16W
R772	1-216-833-11	METAL CHIP	10K	5%	1/16W
R774	1-216-864-11	METAL CHIP	0	5%	1/16W
R776	1-216-864-11	METAL CHIP	0	5%	1/16W
R777	1-216-809-11	METAL CHIP	100	5%	1/16W
R778	1-216-833-11	METAL CHIP	10K	5%	1/16W
R779	1-216-864-11	METAL CHIP	0	5%	1/16W
R781	1-216-817-11	METAL CHIP	470	5%	1/16W
R784	1-216-857-11	METAL CHIP	1M	5%	1/16W
R788	1-216-801-11	METAL CHIP	22	5%	1/16W
R789	1-216-801-11	METAL CHIP	22	5%	1/16W
R790	1-216-864-11	METAL CHIP	0	5%	1/16W
R791	1-216-823-11	METAL CHIP	1.5K	5%	1/16W
R792	1-216-801-11	METAL CHIP	22	5%	1/16W
R793	1-216-801-11	METAL CHIP	22	5%	1/16W
R794	1-216-864-11	METAL CHIP	0	5%	1/16W
R795	1-216-864-11	METAL CHIP	0	5%	1/16W
R796	1-216-829-11	METAL CHIP	4.7K	5%	1/16W
R797	1-216-833-11	METAL CHIP	10K	5%	1/16W
R798	1-216-829-11	METAL CHIP	4.7K	5%	1/16W
R799	1-216-833-11	METAL CHIP	10K	5%	1/16W
R1004	1-216-864-11	METAL CHIP	0	5%	1/16W
R1005	1-216-864-11	METAL CHIP	0	5%	1/16W
R1006	1-216-864-11	METAL CHIP	0	5%	1/16W
R1009	1-216-864-11	METAL CHIP	0	5%	1/16W
R1013	1-216-833-11	METAL CHIP	10K	5%	1/16W
R1017	1-216-864-11	METAL CHIP	0	5%	1/16W
R1018	1-216-809-11	METAL CHIP	100	5%	1/16W
R1019	1-216-809-11	METAL CHIP	100	5%	1/16W
R1020	1-216-809-11	METAL CHIP	100	5%	1/16W
		< VIBRATOR >			
X702	1-795-537-21	VIBRATOR, CRYSTAL (6MHz)			
X721	1-795-244-11	VIBRATOR, CERAMIC (10MHz)			

****

	A-4732-544-A	PANEL BOARD, COMPLETE			
		**********			
	4-245-359-01	HOLDER (FL)			
		< CAPACITOR >			
C851	1-162-964-11	CERAMIC CHIP	0.001uF	10%	50V
C852	1-162-964-11	CERAMIC CHIP	0.001uF	10%	50V
C853	1-162-964-11	CERAMIC CHIP	0.001uF	10%	50V
C854	1-131-992-91	CERAMIC CHIP	100000PF		35V
C855	1-124-589-11	ELECT	47uF	20%	16V
C856	1-162-922-11	CERAMIC CHIP	39PF	5.00%	50V
C857	1-131-992-91	CERAMIC CHIP	100000PF		35V
C858	1-131-992-91	CERAMIC CHIP	100000PF		35V
C860	1-162-960-11	CERAMIC CHIP	220PF	10%	50V
C861	1-162-960-11	CERAMIC CHIP	220PF	10%	50V
C862	1-162-960-11	CERAMIC CHIP	220PF	10%	50V
C863	1-162-960-11	CERAMIC CHIP	220PF	10%	50V
C864	1-162-960-11	CERAMIC CHIP	220PF	10%	50V
C865	1-162-960-11	CERAMIC CHIP	220PF	10%	50V
C866	1-162-960-11	CERAMIC CHIP	220PF	10%	50V

PANEL POWER

Ref. No.	Part No.	Description			Remarks
C867	1-162-960-11	CERAMIC CHIP	220PF	10%	50V
C868	1-162-960-11	CERAMIC CHIP	220PF	10%	50V
C869	1-162-960-11	CERAMIC CHIP	220PF	10%	50V
C870	1-162-960-11	CERAMIC CHIP	220PF	10%	50V
C871	1-162-960-11	CERAMIC CHIP	220PF	10%	50V
C872	1-162-960-11	CERAMIC CHIP	220PF	10%	50V
C873	1-162-960-11	CERAMIC CHIP	220PF	10%	50V
		< CONNECTOR >			
CN801	1-691-647-11	SOCKET, CONNECTOR 13P			
		< FILTER >			
FL851	1-518-889-11	INDICATOR TUBE, FLUORESCENT			
		< IC >			
IC851	8-759-659-03	IC MSM9202-07G4-KDR1			
		< TRANSISTOR >			
Q851	8-729-120-28	TRANSISTOR	2SC3052F-T1-LF		
Q852	8-729-120-28	TRANSISTOR	2SC3052F-T1-LF		
		< RESISTOR >			
R801	1-216-821-11	METAL CHIP	1K	5%	1/16W
R802	1-216-825-11	METAL CHIP	2.2K	5%	1/16W
R803	1-216-825-11	METAL CHIP	2.2K	5%	1/16W
R811	1-216-821-11	METAL CHIP	1K	5%	1/16W
R812	1-216-825-11	METAL CHIP	2.2K	5%	1/16W
R813	1-216-825-11	METAL CHIP	2.2K	5%	1/16W
R814	1-216-829-11	METAL CHIP	4.7K	5%	1/16W
R815	1-216-833-11	METAL CHIP	10K	5%	1/16W
R816	1-216-837-11	METAL CHIP	22K	5%	1/16W
R821	1-216-821-11	METAL CHIP	1K	5%	1/16W
R822	1-216-825-11	METAL CHIP	2.2K	5%	1/16W
R823	1-216-825-11	METAL CHIP	2.2K	5%	1/16W
R824	1-216-829-11	METAL CHIP	4.7K	5%	1/16W
R825	1-216-833-11	METAL CHIP	10K	5%	1/16W
R826	1-216-837-11	METAL CHIP	22K	5%	1/16W
R827	1-216-841-11	METAL CHIP	47K	5%	1/16W
R851	1-216-809-11	METAL CHIP	100	5%	1/16W
R852	1-216-809-11	METAL CHIP	100	5%	1/16W
R853	1-216-809-11	METAL CHIP	100	5%	1/16W
R854	1-216-809-11	METAL CHIP	100	5%	1/16W
R856	1-216-827-11	METAL CHIP	3.3K	5%	1/16W
R857	1-216-841-11	METAL CHIP	47K	5%	1/16W
R858	1-216-841-11	METAL CHIP	47K	5%	1/16W
R859	1-216-821-11	METAL CHIP	1K	5%	1/16W
R860	1-216-821-11	METAL CHIP	1K	5%	1/16W
		< SWITCH >			
S801	1-762-875-21	SWITCH, KEYBOARD (DISPLAY)			
S802	1-762-875-21	SWITCH, KEYBOARD (NET MD)			
S803	1-762-875-21	SWITCH, KEYBOARD (⏏ TAPE)			
S804	1-762-875-21	SWITCH, KEYBOARD (⏏ MD)			
S811	1-762-875-21	SWITCH, KEYBOARD (❚❚ (TAPE))			
S812	1-762-875-21	SWITCH, KEYBOARD (REC MODE (MD))			
S813	1-762-875-21	SWITCH, KEYBOARD (DIRECTION)			
S814	1-762-875-21	SWITCH, KEYBOARD (REC/REC IT (MD))			
S815	1-762-875-21	SWITCH, KEYBOARD (REC (TAPE))			
S816	1-762-875-21	SWITCH, KEYBOARD (MODE (SYNC REC))			
S817	1-762-875-21	SWITCH, KEYBOARD (ENTER/START (SYNC REC))			
S821	1-786-564-11	SWITCH, TACTILE (MD CONTROL)			
S822	1-786-564-11	SWITCH, TACTILE (TAPE CONTROL)			

****

	A-4732-549-A	POWER BOARD, COMPLETE			
		**********			
		< CAPACITOR >			
C51	1-104-662-91	ELECT	22uF	20.00%	25V
C61	1-136-497-81	FILM	0.1uF	5.00%	50V
C62	1-111-235-61	ELECT	10000uF	20.00%	25V
C71	1-136-497-81	FILM	0.1uF	5.00%	50V
C72	1-126-968-11	ELECT	100uF	20.00%	50V
C73	1-126-964-11	ELECT	10uF	20.00%	50V
C74	1-126-964-11	ELECT	10uF	20.00%	50V
C91	1-162-970-11	CERAMIC CHIP	0.01uF	10%	25V
		< CONNECTOR >			
CN1	1-774-108-11	PIN, CONNECTOR (PC BOARD)			
CN2	1-564-321-00	PIN, CONNECTOR (3.96mm PITCH) 2P (AC IN)			
CN3	1-564-321-00	PIN, CONNECTOR (3.96mm PITCH) 2P (AC OUTLET)			
CN51	1-691-768-11	PLUG (MICRO CONNECTOR) 6P			
CN52	1-770-384-21	CONNECTOR, BOARD TO BOARD 16P			
CN91	1-784-922-21	PIN, CONNECTOR 5P			
		< DIODE >			
D1	8-719-988-61	DIODE 1SS355TE-17			
D51	8-719-988-61	DIODE 1SS355TE-17			
D52	8-719-988-61	DIODE 1SS355TE-17			
D53	8-719-988-61	DIODE 1SS355TE-17			
D54	8-719-988-61	DIODE 1SS355TE-17			
D61	8-719-028-23	DIODE D3SBA20-4101			
D71	6-500-522-21	DIODE 10EDB40-TB3			
D72	6-500-522-21	DIODE 10EDB40-TB3			
D73	6-500-522-21	DIODE 10EDB40-TB3			
D74	6-500-522-21	DIODE 10EDB40-TB3			
D75	8-719-083-71	DIODE UDZSTE-1730B			
D76	8-719-069-56	DIODE UDZSTE-176.2B			
D91	8-719-988-61	DIODE 1SS355TE-17			
D92	8-719-988-61	DIODE 1SS355TE-17			
		< GROUND TERMINAL >			
EPT51	1-537-771-21	TERMINAL BOARD, GROUND			
		< FUSE HOLDER >			
FH1	1-533-323-311	FUSE HOLDER			
FH2	1-533-323-311	FUSE HOLDER			
		< JACK >			
J91	1-815-194-11	CONNECTOR, USB (B) ( )			

The components identified by mark ⚠ or dotted line with mark ⚠ are critical for safety.
Replace only with part number specified.

Ref. No.	Part No.	Description			Remarks
		< LINE FILTER >			
⚠LF1	1-419-625-11	COIL, LINE FILTER			
		< TRANSISTOR >			
Q71	8-729-101-07	TRANSISTOR	2SB798-T1DK		
		< RESISTOR >			
R51	1-216-817-11	METAL CHIP	470	5%	1/16W
R52	1-216-817-11	METAL CHIP	470	5%	1/16W
R53	1-216-824-11	METAL CHIP	1.8K	5%	1/16W
⚠R61	1-219-591-11	FUSIBLE	0.1	5%	1/2W
⚠R71	1-219-153-11	FUSIBLE	10	5%	1/4W
R72	1-260-103-11	CARBON	2.2K	5%	1/2W
R73	1-216-833-11	METAL CHIP	10K	5%	1/16W
R74	1-216-821-11	METAL CHIP	1K	5%	1/16W
R75	1-216-821-11	METAL CHIP	1K	5%	1/16W
R76	1-216-821-11	METAL CHIP	1K	5%	1/16W
R77	1-216-821-11	METAL CHIP	1K	5%	1/16W
R91	1-216-864-11	METAL CHIP	0	5%	1/16W
		< RELAY >			
⚠RY1	1-755-198-11	RELAY			

****

		MISCELLANEOUS
		**********
6	1-775-153-11	WIRE (FLAT TYPE)(17 CORE)
7	1-775-238-11	WIRE (FLAT TYPE)(27 CORE)
8	1-827-037-11	CORD (WITH CONNECTOR) 7P
⚠10	1-777-071-63	CORD, POWER
59	1-769-972-11	WIRE (FLAT TYPE)(13 CORE)
102	1-796-665-11	DECK, MECH
103	1-827-281-11	WIRE (FLAT TYPE)(10 CORE)
106	1-773-215-11	WIRE (FLAT TYPE)(25 CORE)
209	1-678-514-11	PWB, FLEXIBLE
⚠210	A-4672-976-A	OPTICAL PICK-UP, KMS-262E
⚠F101	1-533-465-11	FUSE, GLASS TUBE (DIA. 5) T1AL/250V
HR901	1-500-670-22	HEAD, OVER LIGHT
M101	A-4735-757-A	MOTOR ASSY, SPINDLE
M102	A-4672-900-A	MOTOR ASSY, SLED
M103	A-4672-975-A	MOTOR ASSY, LOADING
S102	1-771-957-11	SWITCH, PUSH (2 KEY)(REFLECT/PROTECT)
⚠T101	1-439-673-11	TRANSFORMER, POWER

The components identified by mark ⚠ or dotted line with mark ⚠ are critical for safety.
Replace only with part number specified.